Ubuntu Municipality

menswaardigheid • hoop • erfenis
ubuntu • ithemba • izithethe
humanity • hope • heritage

VICTORIA WEST– UPGRADING OF GROUNDWATER SUPPLY

TENDER NO. UB/VW/23/2022

TENDERER: .....

TELEPHONE: ..... **EMAIL:** .....

TOTAL PRICE (INCL. VAT) ..... **CONTRACT PERIOD** .....

CLOSING DATE **15 November 2022** **TIME** **12h00**

Ubuntu Municipality

menswaardigheid • hoop • erfenis
ubuntu • ithemba • izithethe
humanity • hope • heritage

iX engineers
Infrastructure Excellence

COMPILED FOR:

Ubuntu Municipality
Acting Municipal Manager
Mr D. Molaole
78 Church Street
Victoria West
7070
Private BagX329
Victoria West
7070

CONSULTANT:

IX ENGINEERS
Contact person: Mr A Khumalo
Montrio Corporate Park, Block 3, Ground Floor
10 Oliver Road, Monument Heights, Kimberley, 8301
PO Box 50, Kimberley 8300, South Africa
Telephone: +27(0)53 830 0460
ambrose.k@ixengineers.co.za
www.ixengineers.co.za

TENDER

VICTORIA WEST– UPGRADING OF GROUNDWATER SUPPLY

TENDER NO. UB/VW/23/2022

CONTENTS

PART T1: TENDERING PROCEDURES

T1.1 : TENDER NOTICE AND INVITATION TO TENDER

UBUNTU MUNICIPALITY

TENDER NO: UB/VW/23/2022

VICTORIA WEST- UPGRADING OF GROUNDWATER SUPPLY

TENDER NOTICE AND INVITATION TO TENDER

The Ubuntu Municipality invites tenderers for VICTORIA WES – UPGRADING OF GROUNDWATER SUPPLY

Only those tenderers who are actively registered with the CIDB in a contractor grading designation equal to or higher than the latest CIDB promulgated contractor grading designation, determined in accordance with the sum tendered will be eligible to tender. The project is estimated that the contractor grading designation must be 5CE or higher**.** Only tenderers who satisfy the eligibility criteria stated in the Tender Conditions and Tender Data are eligible to submit tenders. Tenderers must be registered on the CSD.

The Ubuntu Municipality Procurement and Supply Chain Management Policies, the Preferential Procurement Policy Framework Act, Act No 5 of 2000 and the regulations promulgated under this act shall apply in the adjudication and awarding of the tender.

Forms MBD4, 8, 9 to be fully completed and attached. Proof that no monies are owed to any municipality by the company and any of its directors must be attached i.e. municipal accounts. Tender documents need to clearly flagged and referenced.

Queries relating to these documents may be addressed directly to Mr.T.H. Zingange Tel No. (053) 6210 026, e-mail thzingange@yahoo.com

A compulsory site briefing will be held on **04 November 2022 @11h00** at the Library Hall, Victoria West. Tender document will be available from **28 October 2022** on the municipal website free of charge.

Sealed tenders, endorsed with the corresponding tender number and description, must be placed in the tender box of Ubuntu Municipality. Postal delivery to reach Ubuntu Municipality, Private Bag X329, Victoria West, 7070, not later than **12h00 on 15 November 2022**, after which the tenders will be opened in public. Telegraphic, telephonic, telex, facsimile, e-mail and late tenders will not be accepted and incomplete tenders and tenders received late will not be considered.

The Municipality does not bind itself to accept the lowest or any tender and reserves the right to accept the whole or only part of the tender if; (a) the tender-amounts received are too high; (b) the tenderers do not comply with the specific tender goals; or (c) objective criteria exist which justify or necessitate the non-acceptance of any tenders. The 80/20 preference point scoring system will be used for the tenders.

Mr. D. Molaole
78 Church Street
Victoria West
7070

28 October 2022

VICTORIA WEST– UPGRADING OF GROUNDWATER SUPPLY

TENDER NO. UB/VW/23/2022

T1.2 : TENDER DATA

The Conditions of Tender are the Standard Conditions of Tender as contained in Annex F of the CIDB Standard for Uniformity in Construction Procurement (refer: www.cidb.org.za) and included as Appendix A in this document.

The Standard Conditions of Tender make several references to the Tender Data. The Tender Data shall have precedence in the interpretation of any ambiguity or inconsistency between it and the Standard Conditions of Tender. Each item of data given below is cross-referenced to the clause in the Standard Conditions of Tender to which it mainly applies.

Clause	Wording
F.1.1	The employer is Ubuntu Local Municipality
F.1.2	The tender documents issued by the employer comprise of those listed in the contents page.
F.1.4	The Employer's agent is: Name: iX engineers (Pty) Ltd Address: 10 Oliver Road, Monument Heights, Kimberley, 8301 Tel: (053) 830 0460 E-mail: ambrose.k@ixengineers.co.za
F.2.1.1	Only those tenderers who satisfy the following eligibility criteria are eligible to submit tenders: a) Only Tenderers that score above the minimum threshold of 70 points for Functionality, identified under the Functionality Evaluation Schedule, will be considered. b) It is a requirement that thirty percent (30%) of the total tendered sum (excluding any contingencies and VAT) be subcontracted to local subcontractors and local enterprises. These subcontractors will be domestic subcontractors to the main contractor and no contractual relationship will exist between the subcontractors and the Employer. The use of these local subcontractors will not relieve the main contractor of any contractual obligations. The quality of workmanship and programming of the works remain the responsibility of the main contractor.
F.2.1.1.2	Only those tenderers who are registered with the CIDB, in a contractor grading designation equal to or higher than a contractor grading designation determined in accordance with the sum tendered, or a value determined in accordance with Regulation 25 (1B) or 25 (7A) of the Construction Industry Development Regulations, for a 5CE class of construction work, are eligible to have their tenders evaluated Joint Ventures are eligible to submit tenders provided that: 1. every member of the joint venture is registered with the CIDB; 2. the lead partner has a contractor grading designation in the CE class of construction work; 3. the combined contractor grading designation calculated in accordance with the Construction Industry Development Regulations is equal to or higher than a contractor grading designation determined in accordance with the sum tendered for a 5CE class of construction work or a value determined in accordance with Regulation 25 (1B) or 25 (7A) of the Construction Industry Development Regulations. Notwithstanding the above, tenderers who are capable of being so registered prior to the evaluation of submissions may be evaluated at the sole discretion of the Employer.

Clause	Wording
F.2.7	The arrangements for a compulsory clarification meeting are: Location: Library Hall, Victoria West, 78 Church Street Date: 04 November 2022 Starting time: **11:00**
F.2.12	No alternative offer will be accepted
F.2.13.5 F.2.15.1	The Employer's address for delivery of tender offers and identification details to be shown on each tender offer package are: Location of tender box: Ubuntu Local Municipality Physical/Postal address: 78 Church Street Victoria West, 7070 Identification details: "**TENDER: VICTORIA WEST– UPGRADING OF GROUNDWATER SUPPLY** **TENDER NO.: UB/VW/23/2022 "**
F.2.13 / F.3.5	A two-envelope procedure will not be followed.
F.2.15	The closing time for submission of tender offers is: **12:00** on **Tuesday, 15 November 2022**
F.2.15	Telephonic, telegraphic, telex, facsimile tender offers will not be accepted.
F.2.16	The tender offer validity period is 90 days.
F.2.23 F2.23.1 F2.23.2	The tenderer is required to submit the following certificates with his tender: Tax Clearance Certificate Tenderers shall be registered and in good standing with the South African Revenue Service (SARS) and shall submit documentary evidence in the form of an **original** valid Tax Clearance Certificate issued by SARS or proof that he or she has made arrangements with SARS to meet his or her outstanding tax obligations. Each party to a Consortium/Joint Venture shall submit a separate Tax Clearance Certificate, or proof that he or she has made the necessary arrangements with SARS. Either a Certificate of Contractor Registration issued by the Construction Industry Development Board *OR* a copy of the application Form for registration in terms of the Construction Industry Development Board Act (Form F006)
F.3.2	Issue addenda *Add the following to F.3.2:* Notwithstanding any requests for confirmation of receipt of Addenda issued, the tenderer shall be deemed to have received such addenda if the employer can show proof of transmission thereof (or a notice in respect thereof) via electronic mail, facsimile or registered post.
F.3.4	The time and location for opening of the tender offers are: Time: **12:00** on **Tuesday, 15 November 2022** Location: **Ubuntu Local Municipality, 78 Church Street,** **Victoria West, 7070**
F.3.11	The procedure for the evaluation of responsive tenders is **Method 2.** **Scoring the financial offer:** The financial offer will be scored using Formula 1/2* (Option 1) where the value of W_1 is: 1) 80 where the financial value inclusive of VAT of one or more responsive tender offers equals or is above R1 000 000. 2) The value of this bid is estimated to exceed R1 000 000 (all applicable taxes included)

<table>
<tr><th>Clause</th><th>Wording</th></tr>
<tr><td></td><td>
and therefore 80/20 system shall be applicable.
3) Preference points for this bid shall be awarded to:
a) Price; and
b) B-BBEE Status Level of Contribution
Points awarded for Price
The 80/20 Preference Point System
A maximum of 80 points is allocated for price on the following basis:
80/20
Ps = 80 $Ps = 80\left(1 - \frac{Pt - P\,min}{P\,min}\right)$
Where:
Ps = Points scored for comparative price of bid under consideration
Pt = Comparative price of bid under consideration
Pmin = Comparative price of lowest acceptable bid
Points awarded for B-BBEE Status Level of Contribution
Preference points must be awarded to a bidder for attaining the B-BBEE status level of contribution in accordance with the table below:
<table>
<tr><th>B-BBEE Status Level of Contributor</th><th>Number of points (80/20 system)</th></tr>
<tr><td>1</td><td>20</td></tr>
<tr><td>2</td><td>18</td></tr>
<tr><td>3</td><td>14</td></tr>
<tr><td>4</td><td>12</td></tr>
<tr><td>5</td><td>8</td></tr>
<tr><td>6</td><td>6</td></tr>
<tr><td>7</td><td>4</td></tr>
<tr><td>8</td><td>2</td></tr>
<tr><td>Non-compliant contributor</td><td>0</td></tr>
</table>
Scoring preferences:
80/20 preference point system for acquisition of goods or services for Rand value equal to and above R1 million
Up 20 tender evaluation points will be awarded to tenderers in respect of:
B-BBEE status level of contribution.
</td></tr>
<tr><td>F.3.11.9</td><td>
Scoring functionality:
The evaluation criteria and weighting for measuring functionality are indicated below:
<table>
<tr><th>Item</th><th>Criteria</th><th>Weighting</th></tr>
<tr><td>1.</td><td>Company related working experience</td><td>30</td></tr>
<tr><td>2.</td><td>Key Staff Competence</td><td>20</td></tr>
<tr><td>3.</td><td>Experience of key staff</td><td>15</td></tr>
<tr><td>4.</td><td>Proposed Programme</td><td>10</td></tr>
</table>
</td></tr>
</table>

Clause	Wording		
	5.	**Bank Rating**	**15**
	6.	**Plant And Equipment**	**10**
		Total Points	**100**

The requirement of this Tender is that a Contractor must score at least **70%** for functionality to qualify for further adjudication in Stage 2 (Evaluation on Financial and Preference).

1. Company related working experience (30 Points)

Points will be awarded for the 4 (four) highest value project successfully completed within the last five years. The Tenderer must submit proof of successfully completed similar and comparative projects, i.e. installation of water or sewer network, elevated storage tanks (steel or any other), etc. Appointment Letter (on the client's letter head) and Copies of Contractor's Completion Certificate (with signatures of the Client, the Consulting Engineer and the Contractor) must be attached for each project.

Target Goals	**Point Allocation**
Completed projects of less than R 5,0 million in the 5 years.	5
Completed projects from R 5,0 Million and less than R10,0 million in the 5 years.	15
Completed projects from R 10,0 Million and less than R15,0 million in the 5 years.	25
Completed projects larger than R 15,0 million in the 5 years.	30

2. Key Staff Competence (20 Points)

The Tenderer must submit Proposed Team Structure, identifying Contract Manager, Site Agent, General Foreman and OHS Practitioner as key personnel. Certified qualifications for each key personnel must be attached for determination of points to be allocated as per the table below:

Key Personnel	**Target Goals**	**Point Allocation**
Contract Manager	Proof of certified qualification of BEng/ BSc/ BTech in Civil Engineering of higher	10
	Proof of certified qualification of National Diploma in Civil Engineering of higher	5
	Less than above	2
Site Agent	Proof of certified qualification of BEng/ BSc/ BTech in Civil Engineering of higher	5
	Proof of certified qualification of National Diploma in Civil Engineering of higher	3
	Less than above	1
OHS Practitioner	Accredited OHS Qualification by SAIOSH and SACPCMP or any recognised accredited organisation	3
	Less than above	1
General Foreman	Trade qualification NQF 4 – Labour intensive	2
	Less than above	1

Clause	Wording

3. Experience of Key Staff (15 Points)

The Tenderer must submit Proposed Team Structure, identifying Contract Manager, Site Agent, General foreman and OHS Practitioner as key personnel. Copies of a comprehensive CVs (not more than 5 pages) with contactable references, clearly outlining the years of related experience for each key personnel must be attached for determination of points to be allocated as per the table below:

Key Personnel	Target Goals	Point Allocation
Contract Manager	10 years or more	5
	5 to 9 years	3
	Less than 5 years	1
Site Agent	10 years or more	4
	5 to 9 years	2
	Less than 5 years	1
OHS practitioner	10 years or more	3
	5 to 9 years	2
	Less than 5 years	1
General Foreman	10 years or more	3
	5 to 9 years	2
	Less than 5 years	1

4. Proposed Programme (10 Points)

The Tenderer must submit Proposed Program of Works for the project, clearly outline the main activities and timeframe from start to end of the project.

Target Goals	Point Allocation
No program attached	0
Inadequate or no information submitted for either or all of the following: - Program Not in Gant Chart format - Program Not outline proposed program of all main construction activities	5
Adequate or detailed and realistic information submitted for either or all of the following: - Program in Gant Chart format - Program outline the proposed program of all main construction activities	10

Clause	Wording
	5. Bank Rating (15 Points) Bank ratings are interpreted as follows:

Rating	Description	Point Allocation
A	Undoubted for amount of enquiry	15
B	Good for amount of enquiry	10
C	Good for amount quoted, if strictly for business	5
D	Fair trade risk for amount quoted	1
E-H	Amount to high/New account/Dishonest on record/ Frequently dishonest	0

6. Plant and Equipment (10 Points)

TLB	≥ 3 TLB's	5
	≤ 1 TLB's	2
	no TLB	0
Bakkie	≥ 2 Bakkies	1
	No Bakkie	0
Hand compactor	≥ 3 Hand compactor	1
	≥1 Hand compactor	0.5
	no Hand compactor	0
Water Tanker	≥1 Water tanker	1
	No Water tanker	0
Tipper Truck	≥ 3 Tipper Trucks	2
	≤ 1 Tipper truck	1
	No tipper truck	0

F.3.13.1

Tender offers will only be accepted if:

a) The offer section of the "Form of Offer and Acceptance" (Part C1.1) is fully completed and signed;

b) The tenderer submitted with the tender offer an original valid Tax Clearance Certificate or Tax Pin issued by the South African Revenue Services;

c) The tenderer is registered with the Construction Industry Development Board in an appropriate contractor grading designation;

d) The tenderer is not in arrears for more than 3 months with municipal rates and taxes and municipal service charges;

e) The tenderer or any of its directors is not listed in the Register of Tender Defaulters in terms of the Prevention and Combating of Corrupt Activities Act of 2004 as a person prohibited from doing business with the public sector; and

f) The tenderer has not:

Clause	Wording
	i) abused the Employer's Supply Chain Management System; or ii) failed to perform on any previous contract and has been given a written notice to this effect; and g) Copy of Joint Venture (JV) agreement signed by all parties (where applicable) h) The tender satisfies the eligibility criteria as per F.2.1.1 above. i) Priced Bill of Quantity j) Letter of intent of insurance / liability to the tune of R10,000,000.00 k) Latest company financial statement.
F.3.18	The number of paper copies of the signed contract to be provided by the Employer is one (1).
	The additional conditions of tender are: 1. Prices must be valid for 120 days and must be inclusive of VAT 2. Tenders need a valid Tax Clearance Certificate or Pin for tender. If no certificate is available, the tender will be rejected. 3. Proof of CIDB registration is **5CE** or higher is required. If no certificate is available, the tender will be rejected. 4. The lowest or any tender will not necessarily be accepted.

PART C1 : AGREEMENT

VICTORIA WEST– UPGRADING OF GROUNDWATER SUPPLY

TENDER NO. UB/VW/23/2022

C1.1 : FORM OF OFFER AND ACCEPTANCE

1. OFFER

The employer, identified in the acceptance signature block, has solicited offers to enter into a contract for the procurement of:

VICTORIA WEST– UPGRADING OF GROUNDWATER SUPPLY

The Tenderer, identified in the offer signature block, has examined the documents listed in the tender data and addenda thereto as listed in all the schedules, and by submitting this offer has accepted the conditions of the quotation.

By the representative of the tenderer, deemed to be duly authorized, signing this part of this form of offer and acceptance, the tenderer offers to perform all of the obligations and liabilities of the Contractor under the contract including compliance with all its terms and conditions according to their true intent and meaning for an amount to be determined in accordance with the Conditions of Contract identified in the contract data.

The offered total of the prices inclusive of Value-Added Tax is .....

..... Rand (in words); R.....(in figures)

This offer may be accepted by the employer by signing the acceptance part of this form of offer and acceptance and returning one copy of this document to the tenderer before the end of the period of validity stated in the document, whereupon the tenderer becomes the party named as the contractor in terms of the conditions of contract identified in the contract data.

Signature(s) ....

Name(s) ....

Capacity ....

for the **TENDERER**.....
(Name and address of organization)

Name
of witness .....

Signature
of witness ..... Date .....

2. ACCEPTANCE

By signing this part of this form of offer and acceptance, the employer identified below accepts the tenderer's offer. In consideration thereof, the employer shall pay the contractor the amount due in accordance with the conditions of contract identified in the contract data. Acceptance of the tenderer's offer shall form an agreement between the employer and the tenderer upon the terms and conditions contained in this agreement and in the contract that is the subject of this agreement.

The terms of the contract are contained in

Part C1: Agreements and contract data (which includes this agreement)

Part C2: Pricing data

Deviations from and amendments to the documents listed in the quotation data and any addenda thereto, as listed in the schedules as well as any changes to the terms of the offer agreed by the tenderer and the employer during this process of offer and acceptance, are contained in the schedule of deviations attached to and forming part of this agreement. No amendments to or deviations from said documents are valid unless contained in this schedule.

The tenderer shall, within two weeks after receiving a completed copy of this agreement including the schedule of deviation (if any), contact the employer's agent (whose details are given in the contract data) to arrange the delivery of any bonds, guarantees, proof insurance and any other documentation to be provided in terms of the conditions of contract identified in the contract data. Failure to fulfil any of the obligations in accordance with those terms shall constitute a repudiation of this agreement.

Notwithstanding anything contained herein, this agreement comes into effect on the date when the tenderer receives one fully completed original copy of this document, including the schedule of deviations (if any). Unless the tenderer (now contractor), within five (5) working days of the date of such receipt, notifies the employer in writing of any reason why he cannot accept the contents of this agreement, this agreement shall constitute a binding contract between the parties.[1]

Signature(s) ....

Name(s) ....

Capacity ....

for the **Employer** Ubuntu Local Municipality
78 Church Street
Victoria West
7070

Name
of witness .....

Signature
of witness ..... Date .....

3. SCHEDULE OF DEVIATIONS

Notes:

1. The extent of deviations from the documents issued by the employer before the closing date is limited to those permitted in terms of the conditions of the quotation.

2. A tenderer's covering letter shall not be included in the final contract document. Should any matter in such letter, which constitutes a deviation as aforesaid, be the subject of agreements reached during the process of offer and acceptance, the outcome of such agreement shall be recorded here.

3. Any other matter arising from the process of offer and acceptance either as a confirmation, clarification or change to the tender documents, and which it is agreed by the Parties becomes an obligation of the contract, shall also be recorded here.

4. Any change or addition to the documents arising from the above agreements and recorded here, shall also be incorporated into the final draft of the contract.

1. Subject .....

   Details .....

2. Subject .....

   Details .....

3. Subject .....

   Details .....

4. Subject .....

   Details .....

5. Subject .....

   Details .....

By the duly authorized representatives signing this schedule of deviations, the employer and the tenderer agree to and accept the foregoing schedule of deviations as the only deviations from and amendments to the documents listed in the quotation data and addenda thereto as listed in the schedules, as well as any confirmation, clarification or changes to the terms of the offer agreed by the tenderer and the employer during this process of offer and acceptance.

It is expressly agreed that no other matter whether in writing, oral communication or implied during the period between the issue of the documents and the receipt by the tenderer of a completed signed copy of this Agreement shall have any meaning or effect in the contract between the parties arising from this agreement.

Signature(s) .....

for the **Tenderer** .....
(Name and address of organization)

Signature(s) .....

for the **Employer,** Ubuntu Local Municipality, 78 Church Street, Victoria West, 7070

VICTORIA WEST– UPGRADING OF GROUNDWATER SUPPLY

TENDER NO. UB/VW/23/2022

C1.2 : LIST OF RETURNABLE DOCUMENTS

The following documents are to be completed and returned as they constitute the tender. Whilst many of the returnable are required for the purpose of evaluating the quotations, some will form part of the subsequent contract, as they form the basis of the quotation offer. For this reason, it is very important that tenderers return **all information requested.**

1.	**FORMS, CERTIFICATES AND SCHEDULES REQUIRED FOR EVALUATION OF RESPONSIVENESS (included hereafter for completion)**
Schedule A	Contractors Information
Schedule B	Compulsory Enterprise Questionnaire
Schedule C	Certificate of Attendance at Clarification Meeting
Schedule D	Joint Venture / Consortium Disclosure Form
Schedule E	Tax Clearance Certificate Requirements
Schedule F	Company Registration Certificates / Agreements / ID Documents
Schedule G	Authority for Signatory
Schedule H	Proof of Registration with CIDB
Schedule I	Declaration Concerning Fulfillment of the Construction Regulations, 2003
Schedule J	Preference Claim Form In Terms of The Preferential Procurement Regulation of 2011 (MBD 6.1)
Schedule K	Record of Addenda to Tender Documents
Schedule L	Declaration of Interest (MBD 4)
Schedule M	Declaration of Bidder's Past Supply Chain Management Practices (MBD 8)
Schedule N	Certificate of Independent Bid Determination (MBD 9)

2.	**FORMS, CERTIFICATES AND SCHEDULES REQUIRED FOR FUNCTIONALITY ASSESSMENT**
Schedule O	Company Related Working Experience
Schedule P	Key Staff Competence
Schedule Q	Experience of Key Staff
Schedule R	Proposed Program of Works
Schedule S	Bank Rating
Schedule T	Plant and Equipment

VICTORIA WEST– UPGRADING OF GROUNDWATER SUPPLY

TENDER NO. UB/VW/23/2022

SCHEDULE A: CONTRACTOR'S INFORMATION

COMPLETE AS FULLY AS POSSIBLE, WHERE APPLICABLE

CONTRACTORS, SUPPLIERS AND SERVICES PROVIDERS (PROFESSIONAL AND NON-PROFESSIONAL) PART ONE

1.0 NAME OF COMPANY

2.0 ADDRESS: PHYSICAL

POSTAL

WEBSITE http

E-MAIL

2.1 PHYSICAL ADDRESS IN LOCAL AREA (if applicable)

CODE

CONTACT PERSON (NAME & DETAILS)

TELEPHONE

FAX

CELL PHONE

3.0 SECTOR (eg Construction)

3.1 NATURE OF BUSINESS (eg Plumbing)

1.

2.

4.0 REGISTERED AS: ☐ CLOSE CORPORATION ☐ PTY LTD COMPANY ☐ CO-OPERATIVE

☐ SOLE TRADER ☐ LTD COMPANY

☐ PARTNERSHIP ☐ NOT REGISTERED

4.1 REGISTERED NO. (if applicable)

5.0 VAT REGISTRATION NO.
(if applicable) (Attach Certified Copy)

5.1 RATES SERVICES ACCOUNT NO.
(Municipality)

6.0 ANNUAL SALES/TURNOVER (Previous Financial Year)

20..... R .....

20..... R .....

20..... R .....

7.0 TOTAL ASSETS (Previous Financial Year)

20..... R .....

20..... R .....

20..... R .....

8.0 CURRENT CONTRACTS WITH UBUNTU MUNICIPALITY

	1.	2.	3.
CONTRACT NO			
DURATION			
APPROXIMATE VALUE			
DATES CONTRACTS WERE SIGNED			
PAYMENT TERMS			

9.0 PREVIOUS CONTRACTS WITH MUNICIPALITIES (Last Financial Year Only)

CONTRACT NO			
APPROXIMATE VALUE			

10.0 NAME AND ADDRESS OF AUDITORS/ACCOUNTING OFFICERS

NAME

ADDRESS

CODE

11.0 PROFESSIONALS ATTACHED TO THE CONCERN WITH QUALIFICATIONS (Name and Qualification)

Initials	Qualifications	Surname

Initials	Qualifications	Surname

PART 2

12.0 NAMES AND NUMBERS OF DIRECTORS/PARTNERS/MEMBERS - % HOLDING

	Initials	Surname	ID Number	Sex%*	HDI Holding	
1.						YES/NO
2.						YES/NO
3.						YES/NO
4.						YES/NO
5.						YES/NO
6.						YES/NO
7.						YES/NO
8.						YES/NO

13.0 INDICATE ON WHICH DATE YOUR BUSINESS STARTED ITS CURRENT TYPE OF BUSINESS

*DEFINITION OF HISTORICALLY DISADVANTAGED INDIVIDUAL (HDI) MEANS A SOUTH AFRICAN CITIZEN.

- WHO, DUE TO THE APARTHEID POLICY THAT HAD BEEN IN PLACE, HAD NO FRANCHISE IN NATIONAL ELECTIONS PRIOR TO THE INTRODUCTION OF THE CONSTITUTION OF THE REPUBLIC OF SOUTH AFRICA, 1983 (ACT NO 110 OF 1983) OR THE CONSTITUTION OF THE REPUBLIC OF SOUTH AFRICA, 1993 (ACT NO 200 OF 1993) ("THE INTERIM CONSTITUTION") AND/OR
  - WHO IS A FEMALE; AND/OR
  - WHO HAS A DISABILITY.

PROVIDED THAT A PERSON WHO OBTAINED SOUTH AFRICAN CITIZENSHIP ON OR AFTER THE COMING INTO EFFECT OF THE INTERIM CONSTITUTION, IS DEEMED NOT TO BE A HDI.

14.0 BANK REFERENCE

ACCOUNT NAME	
BANK NAME	
BRANCH NAME	
BRANCH CODE	
ACCOUNT NUMBER	

I ..... (FULL NAME) HEREBY CERTIFY THAT THE ABOVE INFORMATION IS TRUE AND CORRECT

....

SIGNATURE **DATE**

(ADDITIONAL INFORMATION MAY BE ATTACHED IF NECESSARY.)

VICTORIA WEST– UPGRADING OF GROUNDWATER SUPPLY

TENDER NO. UB/VW/23/2022

SCHEDULE B : COMPULSORY ENTERPRISE QUESTIONNAIRE

The following particulars must be furnished. In the case of a joint venture, **separate** enterprise questionnaires in respect of each partner must be completed and submitted.

Section 1: Name of enterprise: .....

Section 2: VAT registration number, if any: .....

Section 3: CIDB registration number, if any: .....

Section 4: Particulars of sole proprietors and partners in partnerships

Name*	Identity number*	Personal income tax number*

***** Complete only if sole proprietor or partnership and attach separate page if more than 3 partners

Section 5: Particulars of companies and close corporations

Company registration number .....

Close corporation number .....

Tax reference number .....

Section 6: Record of service of the state

Indicate by marking the relevant boxes with a cross, if any sole proprietor, partner in a partnership or director, manager, principal shareholder or stakeholder in a company or close corporation is currently or has been within the last 12 months in the service of any of the following:

- ☐ a member of any municipal council
- ☐ a member of any provincial legislature
- ☐ a member of the National Assembly or the National Council of Province
- ☐ a member of the board of directors of any municipal entity
- ☐ an official of any municipality or municipal entity
- ☐ an employee of any provincial department, national or provincial public entity or constitutional institution within the meaning of the Public Finance Management Act, 1999 (Act 1 of 1999)
- ☐ a member of an accounting authority of any national or provincial public entity
- ☐ an employee of Parliament or a provincial legislature

If any of the above boxes are marked, disclose the following: (insert separate page if necessary)

Name of sole proprietor, partner, director, manager, principal shareholder or stakeholder	Name of institution, public office, board or organ of state and position held	Status of service (tick appropriate column)	
		current	Within last 12 months

* Insert separate page if necessary

Section 7: Record of spouses, children and parents in the service of the state

Indicate by marking the relevant boxes with a cross, if any spouse, child or parent of a sole proprietor, partner in a partnership or director, manager, principal shareholder or stakeholder in a company or close corporation is currently or has been within the last 12 months been in the service of any of the following:

- ☐ a member of any municipal council
- ☐ a member of any provincial legislature
- ☐ a member of the National Assembly or the National Council of Province
- ☐ a member of the board of directors of any municipal entity
- ☐ an employee of any provincial department, national or provincial public entity or constitutional institution within the meaning of the Public Finance Management Act, 1999 (Act 1 of 1999)
- ☐ a member of an accounting authority of any national or provincial public entity

☐ an official of any municipality or municipal entity ☐ an employee of Parliament or a provincial legislature

Name of spouse, child or parent	Name of institution, public office, board or organ of state and position held	Status of service (tick appropriate column)	
		current	Within last 12 months

* Insert separate page if necessary

The undersigned, who warrants that he/she is duly authorised to do so on behalf of the enterprise:

i) authorizes the Employer to obtain a tax clearance certificate from the South African Revenue Services that my / our tax matters are in order;

ii) confirms that neither the name of the enterprise or the name of any partner, manager, director or other person, who wholly or partly exercises, or may exercise, control over the enterprise appears on the Register of Tender Defaulters established in terms of the Prevention and Combating of Corrupt Activities Act of 2004;

iii) confirms that no partner, member, director or other person, who wholly or partly exercises, or may exercise, control over the enterprise, has within the last five years been convicted of fraud or corruption;

iv) confirms that I / we are not associated, linked or involved with any other tendering entities submitting tender offers and have no other relationship with any of the tenderers or those responsible for compiling the scope of work that could cause or be interpreted as a conflict of interest;

v) confirms that the contents of this questionnaire are within my personal knowledge and are to the best of my belief both true and correct.

Signed ---------- Date ----------

Name ---------- Position ----------

Enterprise name ----------

* The schedule should be used where tenders are subject to the local Government: Municipal Finance Management Act

VICTORIA WEST– UPGRADING OF GROUNDWATER SUPPLY

TENDER NO. UB/VW/23/2022

SCHEDULE C : CERTIFICATE OF ATTENDANCE AT CLARIFICATION MEETING

This is to certify that

..... (Tenderer)

of ..... (address)

.....

was represented by the person(s) named below at the compulsory meeting held for all tenderers at .

……. (location) on ..... (date), starting at ….....

We acknowledge that the purpose of the meeting was to acquaint ourselves with the site of the works and / or matters incidental to doing the work specified in the tender documents in order for us to take account of everything necessary when compiling our rates and prices included in the tender.

Particulars of person(s) attending the meeting:

Name ..... Signature .....

Capacity .....

Name ..... Signature .....

Capacity .....

Attendance of the above persons at the meeting is confirmed by the Employer's representative, namely:

Name : A Khumalo Signature .....

Capacity : Engineer Date & Time .....

VICTORIA WEST– UPGRADING OF GROUNDWATER SUPPLY

TENDER NO. UB/VW/23/2022

SCHEDULE D: JOINT VENTURE / CONSORTIUM DISCLOSURE FORM

TO BE COMPLETED ONLY IF TENDER IS SUBMITTED IN A JOINT VENTURE OR CONSORTIUM

GENERAL

i) All the information requested must be filled in the spaces provided. If additional space is required, additional sheets may be used and attached to the original documents.

ii) A copy of the joint venture agreement must be attached to this form, in order to demonstrate the Affirmable, Joint Venture Partner's share in the ownership, control, management responsibilities, risks and profits of the joint venture, the proposed joint venture agreement must include specific details relating to:

a) the contributions of capital and equipment

b) work items to be performed by the Affirmable Joint Venture Partner's own forces

c) work items to be performed under the supervision of the Affirmable Joint Venture Partner.

iii) Copies of all written agreements between partners concerning the contract must be attached to this form including those, which relate to ownership options and to restrictions/limits regarding ownership and control.

iv) ABE partners must complete ABE Declaration Affidavits.

v) The joint venture must be formalised. All pages of the joint venture agreement must be signed by all the parties concerned. A letter/ notice of intention to formalise a joint venture once the contract has been awarded will not be considered.

vi) Should any of the above not be complied with, the joint venture will be deemed null and void and will be considered non-responsive.

1. JOINT VENTURE PARTICULARS

a) Name .....

b) Postal address .....

.....

c) Physical address .....

.....

d) Telephone .....

e) **Fax** .....

2. IDENTITY OF EACH NON-AFFIRMABLE JOINT VENTURE PARTNER

2.1 Name of Firm .....

Postal address .....

.....

Physical address .....

.....

Telephone .....

Fax .....

Contact Person for matters pertaining to Joint Venture Participation Goal

.....

2.2 Name of Firm .....

Postal address .....

.....

Physical address .....

.....

Telephone .....

Fax .....

Contact Person for matters pertaining to Joint Venture Participation Goal

.....

3. IDENTITY OF EACH AFFIRMABLE JOINT VENTURE PARTNER

3.1 Name of Firm .....

Postal address .....

.....

Physical address .....

.....

Telephone .....

Fax .....

Contact Person for matters pertaining to Joint Venture Participation Goal

.....

3.2 Name of Firm .....

Postal address .....

.....

Physical address .....

.....

Telephone .....

Fax .....

Contact Person for matters pertaining to Joint Venture Participation Goal

.....

3.3 Name of Firm .....

Postal address .....

.....

Physical address .....

.....

Telephone .....

Fax .....

Contact Person for matters pertaining to Joint Venture Participation Goal

.....

(Continue as required for further Affirmable Joint Venture Partners)

4. BRIEF DESCRIPTION OF THE ROLES OF THE AFFIRMABLE JOINT VENTURE PARTNERS IN THE JOINT VENTURE

.....

.....

.....

.....

.....

.....

.....

1. **OWNERSHIP OF THE JOINT VENTURE**

a) Affirmable Joint Venture Partner ownership percentage(s) ..... **%**

b) Non-Affirmable Joint Venture Partner ownership percentage(s) ..... **%**

c) Affirmable Joint Venture Partner percentages in respect of:*

(i) Profit and loss sharing

.....

(ii) Initial capital contribution in Rands

.....

.....

.....

.....

(*Brief descriptions and further particulars should be provided to clarify percentages).

(iii) Anticipated on-going capital contributions in Rands

.....

.....

.....

.....

(iv) Contributions of equipment (specify types, quality and quantities of equipment) to be provided by each partner

.....

.....

.....

.....

2. **RECENT CONTRACTS EXECUTED BY PARTNERS IN THEIR OWN RIGHT AS PRIME CONTRACTORS OR AS PARTNERS IN JOINT VENTURES**

	NON-AFFRIMABLE JOINT VENTURE PARTNERS	PARTNER NAME
a)		
b)		
c)		
d)		
e)		

	AFFRIMABLE JOINT VENTURE PARTNERS	PARTNER NAME
a)		
b)		
c)		
d)		
e)		

3. **CONTROL AND PARTICIPATION IN THE JOINT VENTURE**

(Identify by name and firm those individuals who are, or will be, responsible for, and have authority to engage in the relevant management functions and policy and decision making, indicating any limitations in their authority e.g. co-signature requirements and Rand limits).

(a) Joint Venture cheque signing

.....

.....

.....

.....

(b) Authority to enter into contracts on behalf of the Joint Venture

.....

(c) Signing, co-signing and / or collateralising of loans

(d) Acquisition of lines of credit

(e) Acquisition of performance bonds

(f) Negotiating and signing labour agreements

(g) Anticipated on-going capital contributions in Rands

.....

.....

.....

.....

4. **MANAGEMENT OF CONTRACT PERFORMANCE**

(Fill in the name and firm of the responsible person).

(a) Supervision of field operations

.....

(b) Major purchasing

.....

(c) Estimating

.....

(d) Technical management

.....

5. **MANAGEMENT AND CONTROL OF JOINT VENTURE**

(a) Identify the “managing partner”, if any

.....

.....

.....

.....

(b) What authority does each partner have to commit or obligate the other to financial institutions, insurances companies, suppliers, subcontractors and/or other parties participating in the execution of the contemplated works?

.....

.....

.....

.....

.....

(c) Describe the management structure for the Joint Venture's work under the contract

MANAGEMENT FUNCTION / DESIGNATION	NAME	PARTNER*

* Fill in "Affirmable Joint Venture Partner" or "non-Affirmable Joint Venture Partner".

6. **PERSONNEL**

(a) State the approximate number of operative personnel (by trade/function/discipline) needed to perform the Joint Venture work under the Contract.

TRADE/FUNCTION/ DISCIPLINE	NUMBER AFFIRMABLE JOINT VENTURE PARTNERS	NUMBER NON-AFFIRMABLE JOINT VENTURE PARTNERS

(b) Number of operative personnel to be employed on the Contract who are currently in the employ of partners.

(i) Number currently employed by Affirmable Joint Venture Partners

.....

(ii) Number currently employed by the Joint Venture

.....

(c) Number of operative personnel who are not currently in the employ of the respective partner and will be engaged on the project by the Joint Venture

.....

(d) Name of individual(s) who will be responsible for hiring Joint Venture employees

.....

.....

(e) Name of partner who will be responsible for the preparation of Joint Venture payrolls

.....

.....

7. **CONTROL AND STRUCTURE OF JOINT VENTURE**
Briefly describe the manner in which the Joint Venture is structured and controlled.

.....

.....

.....

.....

The undersigned warrants that he/she is duly authorised to sign this Joint Venture Disclosure Form and affirms that the foregoing statements are true and correct and include all material information necessary to identify and explain the terms and operations of the Joint Venture and the intended participation of each partner in the undertaking.

The undersigned further covenants and agrees to provide the Employer with complete and accurate information regarding actual Joint Venture work and the payment therefore, and any proposed changes in any provisions of the Joint Venture agreement, and to permit the audit and examination of the books, records and files of the Joint Venture, or those of each partner relevant to the Joint Venture, by duly authorised representatives of the Employer.

Signature .....

Duly authorised to sign on behalf of .....

Name .....

Address .....

Telephone .....

Date .....

Signature .....

Duly authorised to sign on behalf of .....

Name .....

Address .....

Telephone .....

Date .....

Signature .....

Duly authorised to sign on behalf of .....

Name .....

Address .....

Telephone .....

Date .....

Signature .....

Duly authorised to sign on behalf of .....

Name .....

Address .....

Telephone .....

Date .....

Signature .....

Duly authorised to sign on behalf of .....

Name .....

Address .....

Telephone .....

Date .....

Signature .....

Duly authorised to sign on behalf of .....

Name .....

Address .....

Telephone .....

Date .....

VICTORIA WEST– UPGRADING OF GROUNDWATER SUPPLY

TENDER NO. UB/VW/23/2022

SCHEDULE E : TAX CLEARANCE CERTIFICATE REQUIREMENT

It is a condition of tender that the taxes, of the successful tenderer <u>must</u> be in order, or that satisfactory arrangements have been made with South African Revenue Service (SARS) to meet the bidder's tax obligations.

Tenderer's original valid tax clearance certificate or declaration by the South African Revenue Services to be attached hereto. From 1 July 2016, SARS no longer issues hard copies of Tax Clearance Certificates. As such, bidders are required to log into the SARS e-filing system to request a Tax Clearance Certificate for "Tender" purposes.

The following link can be followed to obtain more information regarding the procedure to request the required certificate:

http://www.sars.gov.za/ClientSegments/Individuals/TCS/Pages/How-to-request-your-TCS.aspx

IMPORTANT NOTES:

1. The following is an abstract from the Preferential Procurement Regulations 2011 promulgated with the Preferential Policy Framework Act No 5 of 2000:

   "Tax clearance"

   Section 14. No Tender may be awarded to any person whose tax matters have not been declared by the South African Revenue Service to be in order."

2. In the case of Joint Venture/Consortium Tenders, each party must submit a separate Tax Clearance Certificate of Declaration by SARS that tax matters are in order for all entities individually.

3. Failure of Tenderer to comply with the above will result in the invalidation of the Bid and the Bidder will be disqualified for being non-responsive.

4. The company VAT number should be quoted on the Tax Clearance Certificate.

5. The tax clearance certificate should be for tender purposes and should clearly indicate "Tender".

**NB. STAPLE TAX CLEARANCE CERTIFICATE TO THIS PAGE!

VICTORIA WEST– UPGRADING OF GROUNDWATER SUPPLY

TENDER NO. UB/VW/23/2022

SCHEDULE F : COMPANY REGISTRATION DOCUMENTS / IDENTITY DOCUMENTS

Attach hereto certified copies of Registration Certificates for Companies and Closed Corporations and certified copies of Identity Documents for Partnerships and Sole proprietors as well as signed Agreements and Powers of Attorney for Joint Venture / Consortium if applicable.

In the case of a Joint Venture/ Consortium, registration certificates should be attached for all parties concerned.

****NB. STAPLE REQUESTED DOCUMENTATION TO THIS PAGE**

VICTORIA WEST– UPGRADING OF GROUNDWATER SUPPLY

TENDER NO. UB/VW/23/2022

SCHEDULE G : AUTHORITY FOR SIGNATORY

Indicate the status of the tenderer by ticking the appropriate box hereunder. The tenderer must complete the certificate set out below for the relevant category and attach any supporting documentation to the relevant schedule.

A Company	B Partnership	C Joint Venture	D Sole Proprietor	E Close Corporation

A. Certificate for Company

I, ..., chairperson of the board of directors of .....… ....., hereby confirm that by resolution of the board (copy attached) taken on ..... 20…., Mr/Ms ..... acting in the capacity of ....., was authorized to sign all documents in connection with this tender and any contract resulting from it on behalf of the company.

As witnesses :

1. ..... Chairman : .....
2. ..... Date : .....

B. Certificate for Partnership

We, the undersigned, being the key partners in the business trading as ....hereby authorize Mr/Ms ....., ... acting in the capacity of ....to sign all documents in connection with the tender for Contract ....and any contract resulting from it on our behalf.

NAME	ADDRESS	SIGNATURE	DATE

NOTE : This certificate is to be completed and signed by all of the key partners upon whom rests the direction of the affairs of the Partnership as a whole

C. Certificate for Joint Venture

We, the undersigned, are submitting this tender offer in Joint Venture and hereby authorise Mr/Ms

....., authorised signatory of the company ...., acting in the capacity of lead partner, to sign all documents in connection with the tender offer for Contract ..... and any contract resulting from it on our behalf.

This authorization is evidenced by the attached power of attorney signed by legally authorized signatories of all the partners to the Joint Venture.

NAME OF FIRM	ADDRESS	AUTHORISING SIGNATURE, NAME & CAPACITY
Lead partner		

D. Certificate for Sole Proprietor

I, ...hereby confirm that I am the sole owner of the business trading as .....

As witnesses:

1. ..... Signature : Sole owner : .....
2. ..... Date : .....

E. Certificate for Close Corporation

We, the undersigned, being the key members in the business trading as .... hereby authorize Mr/Ms ..... acting in the capacity of ....., to sign all documents in connection with the tender for Contract ..... and any contract resulting from it on our behalf.

NAME	ADDRESS	SIGNATURE	DATE

NOTE: This certificate is to be completed and signed by all of the key-partners upon who rests the direction of the affairs of the Partnership as a whole.

VICTORIA WEST– UPGRADING OF GROUNDWATER SUPPLY

TENDER NO. UB/VW/23/2022

SCHEDULE H : PROOF OF REGISTRATION WITH CIDB

The Bidder shall attach hereto the Contractors proof of registration with CIDB. CRS number(s) also to be provided.

In the case of Consortium/Joint Venture Tenders, each partner shall provide their own CIDB registration certificate as well as a combined CIDB rating calculation.

In all cases above, a printout/ copy of the CIDB registration check on the CIDB Register of Contractors website would be sufficient (https://registers.cidb.org.za/PublicContractors/ContractorSearch) .

For Joint Ventures, a combined CIDB grading should be calculated and attached **in addition** to proof for each individual partner and can be found on:
(https://registers.cidb.org.za/PublicContractors/JVGradingDesignationCalc)

****NB. STAPLE PROOF OF REGISTRATION TO THIS PAGE!**

VICTORIA WEST– UPGRADING OF GROUNDWATER SUPPLY

TENDER NO. UB/VW/23/2022

SCHEDULE I : DECLARATION CONCERNING FULFILMENT OF THE CONSTRUCTION REGULATIONS, 2014

In terms of regulation 4(4) of the Construction Regulations, 2014 (hereinafter referred to as the Regulations), promulgated on 18 July 2003 in terms of Section 43 of the Occupational Health and Safety Act, 1993 (Act No. 85 of 1993) the Employer shall not appoint a contractor to perform construction work unless the Contractor can satisfy the Employer that his/her firm has the necessary competencies and resources to carry out the work safely and has allowed adequately in his/her tender for the due fulfilment of all the applicable requirements of the Act and the Regulations.

Tenderers shall answer the questions below:

1. I confirm that I am fully conversant with the Regulations and that my company has (or will acquire/procure) the necessary competencies and resources to timeously, safely and successfully comply with all of the requirements of the Regulations.

(Tick)

YES	
NO	

2. Indicate which approach shall be employed to achieve compliance with the Regulations.

(Tick)

Own resources, competent in terms of the Regulations (refer to 3 below)	
Own resources, still to be hired and/or trained (until competency is achieved)	
Specialist subcontract resources (competent) - Specify:	

3. Provide details of proposed key persons, competent in terms of the Regulations, who will form part of the Contract team as specified in the Regulations (CVs to be attached):

.....

.....

.....

4. Provide details of proposed training (if any) that will be undergone:

.....

.....

.....

.....

.....

.....

5. List potential key risks identified and measures for addressing risks:

.....

.....

.....

.....

.....

.....

6. I have fully included in my tendered rates and prices (in the appropriate payment items provided in the Schedule of Quantities) for all resources, actions, training and any other costs required for the due fulfilment of the Regulations for the duration of the construction and defects repair period

(Tick)

YES	
NO	

SIGNATURE OF PERSON(S) AUTHORISED TO SIGN THIS TENDER:

1. ..... ID NO: .....

(Name in Print): .....

2. ..... ID NO: .....

(Name in Print): .....

VICTORIA WEST– UPGRADING OF GROUNDWATER SUPPLY

TENDER NO. UB/VW/23/2022

SCHEDULE J : PREFERENCE CLAIM FORM

THE TENDERER MUST ATTACH TO THIS PAGE A CERTIFIED COPY OF A VALID B-BBEE RATING CERTIFICATE

PREFERENCE POINTS CLAIM FORM IN TERMS OF THE PREFERENTIAL PROCUREMENT REGULATIONS 2017

This preference form must form part of all bids invited. It contains general information and serves as a claim form for preference points for Broad-Based Black Economic Empowerment (B-BBEE) Status Level of Contribution

NB: BEFORE COMPLETING THIS FORM, BIDDERS MUST STUDY THE GENERAL CONDITIONS, DEFINITIONS AND DIRECTIVES APPLICABLE IN RESPECT OF B-BBEE, AS PRESCRIBED IN THE PREFERENTIAL PROCUREMENT REGULATIONS, 2017.

---

1. GENERAL CONDITIONS

1.1 The following preference point systems are applicable to all bids:

- the 80/20 system for requirements with a Rand value of up to R1 000 000 (all applicable taxes included); and

1.2 The value of this bid is estimated to exceed R1 000 000 (all applicable taxes included) and therefore the 80/20 system shall be applicable.

1.3 Preference points for this bid shall be awarded for:

(a) Price; and
(b) B-BBEE Status Level of Contribution.

1.3.1 The maximum points for this bid are allocated as follows:

		POINTS
1.3.1.1	**PRICE**	……..
1.3.1.2	**B-BBEE STATUS LEVEL OF CONTRIBUTION**	……...
	Total points for Price and B-BBEE must not exceed	**100**

1.4 Failure on the part of a bidder to fill in and/or to sign this form and submit a B-BBEE Verification Certificate from a Verification Agency accredited by the South African Accreditation System (SANAS) or a Registered Auditor approved by the Independent Regulatory Board of Auditors (IRBA) or an Accounting Officer as contemplated in the Close Corporation Act (CCA) together with the bid, will be interpreted to mean that preference points for B-BBEE status level of contribution are not claimed.

1.5. The purchaser reserves the right to require of a bidder, either before a bid is adjudicated or at any time subsequently, to substantiate any claim in regard to preferences, in any manner required by the purchaser.

2. DEFINITIONS

"B-BBEE" means broad-based black economic empowerment as defined in section 1 of the Broad-Based Black Economic Empowerment Act;
"B-BBEE status level of contributor" means the B-BBEE status of an entity in terms of a code of good practice on black economic empowerment issued in terms of section 9(1) of the Broad-Based Black Economic Empowerment Act;
"black designated groups" has the meaning assigned to it in the codes of good practice issued in terms of section 9(1) of the Broad-Based Black Economic Empowerment Act;
"black people" has the meaning assigned to it in section 1 of the Broad-Based Black Economic Empowerment Act;
"Broad-Based Black Economic Empowerment Act" means the Broad-Based Black Economic Empowerment Act, 2003 (Act No. 53 of 2003);
"co-operative" means a co-operative registered in terms of section 7 of the Cooperatives Act, 2005 (Act No. 14 of 2005);
"designated group" means-
(a) black designated groups;
(b) black people;
(c) women;
(d) people with disabilities; or
(e) small enterprises, as defined in section 1 of the National Small Enterprise Act, 1996
(Act No. 102 of 1996);
"designated sector" means a sector, sub-sector or industry or product designated interms of regulation 8(1)(a);
"EME" means an exempted micro enterprise in terms of a code of good practice on black economic empowerment issued in terms of section 9(1) of the Broad-Based Black Economic Empowerment Act;
"functionality" means the ability of a tenderer to provide goods or services in accordance with specifications as set out in the tender documents;
"military veteran" has the meaning assigned to it in section 1 of the Military Veterans Act, 2011 (Act No. 18 of 2011);
"National Treasury" has the meaning assigned to it in section 1 of the Public Finance Management Act, 1999 (Act No. 1 of 1999);
"people with disabilities" has the meaning assigned to it in section 1 of the Employment Equity Act, 1998 (Act No. 55 of 1998);
"price" includes all applicable taxes less all unconditional discounts;
"proof of B-BBEE status level of contributor" means-
(a) the B-BBEE status level certificate issued by an authorised body or person;
(b) a sworn affidavit as prescribed by the B-BBEE Codes of Good Practice; or
(c) any other requirement prescribed in terms of the Broad-Based Black Economic
"QSE" means a qualifying small business enterprise in terms of a code of good practice on black economic empowerment issued in terms of section 9(1) of the Broad-Based Black Economic Empowerment Act;
"Rand value" means the total estimated value of a contract in Rand, calculated at the time of the tender invitation;
"rural area" means-
(a) a sparsely populated area in which people farm or depend on natural resources, including villages and small towns that are dispersed through the area; or
(b) an area including a large settlement which depends on migratory labour and remittances and government social grants for survival, and may have a traditional land tenure system;
"stipulated minimum threshold" means the minimum threshold stipulated in terms of regulation 8(1)(b);
"the Act" means the Preferential Procurement Policy Framework Act, 2000 (Act No. 5 of 2000);
"township" means an urban living area that any time from the late 19th century until 27 April 1994, was reserved for black people, including areas developed for historically disadvantaged individuals post 27 April 1994;
"treasury" has the meaning assigned to it in section 1 of the Public Finance Management Act, 1999 (Act No. 1 of 1999); and
"youth" has the meaning assigned to it in section 1 of the National Youth Development Agency Act, 2008 (Act No. 54 of 2008).

3. ADJUDICATION USING A POINT SYSTEM

3.1 The bidder obtaining the highest number of total points will be awarded the contract.

3.2 Preference points shall be calculated after prices have been brought to a comparative basis taking into account all factors of non-firm prices and all unconditional discounts;.

3.3 Points scored must be rounded off to the nearest 2 decimal places.

3.4 In the event that two or more bids have scored equal total points, the successful bid must be the one scoring the highest number of preference points for B-BBEE.

3.5 However, when functionality is part of the evaluation process and two or more bids have scored equal points including equal preference points for B-BBEE, the successful bid must be the one scoring the highest score for functionality.

3.6 Should two or more bids be equal in all respects, the award shall be decided by the drawing of lots.

4. POINTS AWARDED FOR PRICE

4.1 THE 80/20 PREFERENCE POINT SYSTEMS

A maximum of points is allocated for price on the following basis:

80/20

$$Ps = 80\left(1 - \frac{Pt - P\min}{P\min}\right)$$

Where

Ps = Points scored for comparative price of bid under consideration

Pt = Comparative price of bid under consideration

Pmin = Comparative price of lowest acceptable bid

5. Points awarded for B-BBEE Status Level of Contribution

5.1 In terms of Regulation 5 (2) and 6 (2) of the Preferential Procurement Regulations, preference points must be awarded to a bidder for attaining the B-BBEE status level of contribution in accordance with the table below:

B-BBEE Status Level of Contributor	Number of points (80/20 system)
1	20
2	18
3	14
4	12
5	8
6	6
7	4
8	2
Non-compliant contributor	0

5.2 Bidders who qualify as EMEs in terms of the B-BBEE Act must submit a certificate issued by an Accounting Officer as contemplated in the CCA or a Verification Agency accredited by SANAS or a Registered Auditor. Registered auditors do not need to meet the prerequisite for IRBA's approval for the purpose of conducting verification and issuing EMEs with B-BBEE Status Level Certificates.

5.3 Bidders other than EMEs must submit their original and valid B-BBEE status level verification certificate or a certified copy thereof, substantiating their B-BBEE rating issued by a Registered Auditor approved by IRBA or a Verification Agency accredited by SANAS.

5.4 A trust, consortium or joint venture, will qualify for points for their B-BBEE status level as a legal entity,

provided that the entity submits their B-BBEE status level certificate.

5.5 A trust, consortium or joint venture will qualify for points for their B-BBEE status level as an unincorporated entity, provided that the entity submits their consolidated B-BBEE scorecard as if they were a group structure and that such a consolidated B-BBEE scorecard is prepared for every separate bid.

5.6 Tertiary institutions and public entities will be required to submit their B-BBEE status level certificates in terms of the specialized scorecard contained in the B-BBEE Codes of Good Practice.

5.7 A person will not be awarded points for B-BBEE status level if it is indicated in the bid documents that such a bidder intends sub-contracting more than 25% of the value of the contract to any other enterprise that does not qualify for at least the points that such a bidder qualifies for, unless the intended sub- contractor is an EME that has the capability and ability to execute the sub-contract.

5.8 A person awarded a contract may not sub-contract more than 25% of the value of the contract to any other enterprise that does not have an equal or higher B-BBEE status level than the person concerned, unless the contract is sub-contracted to an EME that has the capability and ability to execute the sub-contract.

6. BID DECLARATION

6.1 Bidders who claim points in respect of B-BBEE Status Level of Contribution must complete the following:

7. B-BBEE STATUS LEVEL OF CONTRIBUTION CLAIMED IN TERMS OF PARAGRAPHS 1.3.1.2 AND 5.1

7.1 B-BBEE Status Level of Contribution: ……. = ……(maximum of 10 or 20 points)

(Points claimed in respect of paragraph 7.1 must be in accordance with the table reflected in paragraph 5.1 and must be substantiated by means of a B-BBEE certificate issued by a Verification Agency accredited by SANAS or a Registered Auditor approved by IRBA or an Accounting Officer as contemplated in the CCA).

8 SUB-CONTRACTING

8.1 Will any portion of the contract be sub-contracted? YES / NO (delete which is not applicable)

8.1.1 If yes, indicate:

(i) what percentage of the contract will be subcontracted? .....……..…%

(ii) the name of the sub-contractor? ……..

(iii) the B-BBEE status level of the sub-contractor? ……..

(iv) whether the sub-contractor is an EME? YES / NO (delete which is not applicable)

9 DECLARATION WITH REGARD TO COMPANY/FIRM

9.1 Name of firm : .....

9.2 VAT registration number : .....

9.3 Company registration number …….

9.4 TYPE OF COMPANY/ FIRM

- ☐ Partnership/Joint Venture / Consortium
- ☐ One person business/sole propriety
- ☐ Close corporation
- ☐ Company
- ☐ (Pty) Limited

[TICK APPLICABLE BOX]

9.5 DESCRIBE PRINCIPAL BUSINESS ACTIVITIES

…….. .....
…… .....
…….....

9.6 COMPANY CLASSIFICATION

- ☐ Manufacturer
- ☐ Supplier
- ☐ Professional service provider
- ☐ Other service providers, e.g. transporter, etc.

[TICK APPLICABLE BOX]

9.7 MUNICIPAL INFORMATION

Municipality where business is situated …….

Registered Account Number …….

Stand Number …….

9.8 TOTAL NUMBER OF YEARS THE COMPANY/FIRM HAS BEEN IN BUSINESS?

……

9.9 I/we, the undersigned, who is / are duly authorised to do so on behalf of the company/firm, certify that the points claimed, based on the B-BBE status level of contribution indicated in paragraph 7 of the foregoing certificate, qualifies the company/ firm for the preference(s) shown and I / we acknowledge that:

(i) The information furnished is true and correct;

(ii) The preference points claimed are in accordance with the General Conditions as indicated in paragraph 1 of this form.

(iii) In the event of a contract being awarded as a result of points claimed as shown in paragraph 7, the contractor may be required to furnish documentary proof to the satisfaction of the purchaser that the claims are correct;

(iv) If the B-BBEE status level of contribution has been claimed or obtained on a fraudulent basis or any of the conditions of contract have not been fulfilled, the purchaser may, in addition to any other remedy it may have –

(a) disqualify the person from the bidding process;

(b) recover costs, losses or damages it has incurred or suffered as a result of that person's conduct;

(c) cancel the contract and claim any damages which it has suffered as a result of having to make less favourable arrangements due to such cancellation;

(d) restrict the bidder or contractor, its shareholders and directors, or only the shareholders and directors who acted on a fraudulent basis, from obtaining business from any organ of state for a period not exceeding 10

years, after the audi alteram partem (hear the other side) rule has been applied; and

(e) forward the matter for criminal prosecution

WITNESSES:

1. ……

2. ……

……
SIGNATURE(S) OF BIDDER(S)

DATE: ……

ADDRESS: ……..

……

……

****NB. STAPLE PROOF OF BEE CERTIFICATION TO THIS PAGE!**

VICTORIA WEST– UPGRADING OF GROUNDWATER SUPPLY

TENDER NO. UB/VW/23/2022

SCHEDULE K : RECORD OF ADDENDA TO TENDER DOCUMENTS

I/We confirm that the following communications received from the Employer before the submission of this tender offer, amending the tender documents, have been taken into account in this tender offer:

No.	Date	Title or Details
1.		
2.		
3.		
4.		
5.		
6.		
7.		
8.		
9.		
10.		

Attach additional pages if more space is required.

Signed ..... Date .....

Name ..... Position .....

Tenderer .....

VICTORIA WEST– UPGRADING OF GROUNDWATER SUPPLY

TENDER NO. UB/VW/23/2022

SCHEDULE L : DECLARATION OF INTEREST FORM

MBD 4

DECLARATION OF INTEREST

1. No bid will be accepted from persons in the service of the state*.

2. Any person, having a kinship with persons in the service of the state, including a blood relationship, may make an offer or offers in terms of this invitation to bid. In view of possible allegations of favouritism, should the resulting bid, or part thereof, be awarded to persons connected with or related to persons in service of the state, it is required that the bidder or their authorised representative declare their position in relation to the evaluating/adjudicating authority and/or take an oath declaring his/her interest.

3 In order to give effect to the above, the following questionnaire must be completed and submitted with the bid.

3.1 Full Name: ……

3.2 Identity Number: ……

3.3 Company Registration Number: ……

3.4 Tax Reference Number: ……

3.5 VAT Registration Number: ……

3.6 Are you presently in the service of the state* **YES / NO**

3.6.1 If so, furnish particulars.

……

3.7 Have you been in the service of the state for the past twelve months? **YES / NO**

3.7.1 If so, furnish particulars.

……

---

* MSCM Regulations: "in the service of the state" means to be –
(a) a member of –
(i) any municipal council;
(ii) any provincial legislature; or
(iii) the national Assembly or the national Council of provinces;

(b) a member of the board of directors of any municipal entity;
(c) an official of any municipality or municipal entity;
(d) an employee of any national or provincial department, national or provincial public entity or constitutional institution within the meaning of the Public Finance Management Act, 1999 (Act No.1 of 1999);
(e) a member of the accounting authority of any national or provincial public entity; or
(f) an employee of Parliament or a provincial legislature.

3.8 Do you, have any relationship (family, friend, other) with persons in the service of the state and who may be involved with the evaluation and or adjudication of this bid? **YES / NO**

3.8.1 If so, furnish particulars.

……

3.9 Are you, aware of any relationship (family, friend, other) between a bidder and any persons in the service of the state who may be involved with the evaluation and or adjudication of this bid? **YES / NO**

3.9.1 If so, furnish particulars

……

3.10 Are any of the company's directors, managers, principal shareholders or stakeholders in service of the state? **YES / NO**

3.10.1 If so, furnish particulars.

……..

3.11 Are any spouse, child or parent of the company's directors, managers, principal shareholders or stakeholders in service of the state? **YES / NO**

3.11.1 If so, furnish particulars.

……

CERTIFICATION

I, THE UNDERSIGNED (NAME) ……

CERTIFY THAT THE INFORMATION FURNISHED ON THIS DECLARATION FORM IS CORRECT.

I ACCEPT THAT THE STATE MAY ACT AGAINST ME SHOULD THIS DECLARATION PROVE TO BE FALSE.

…….. ……
Signature Date

…….… ……
Position Name of Bidder

VICTORIA WEST– UPGRADING OF GROUNDWATER SUPPLY

TENDER NO. UB/VW/23/2022

SCHEDULE M : DECLARATION OF BIDDER'S PAST SUPPLY CHAIN MANAGEMENT PRACTICES (MBD 8)

MBD 8

DECLARATION OF BIDDER'S PAST SUPPLY CHAIN MANAGEMENT PRACTICES

1 This Municipal Bidding Document must form part of all bids invited.

2 It serves as a declaration to be used by municipalities and municipal entities in ensuring that when goods and services are being procured, all reasonable steps are taken to combat the abuse of the supply chain management system.

3 The bid of any bidder may be rejected if that bidder, or any of its directors have:

a. abused the municipality's / municipal entity's supply chain management system or committed any improper conduct in relation to such system;

b. been convicted for fraud or corruption during the past five years;

c. willfully neglected, reneged on or failed to comply with any government, municipal or other public sector contract during the past five years; or

d. been listed in the Register for Tender Defaulters in terms of section 29 of the Prevention and Combating of Corrupt Activities Act (No 12 of 2004).

4 In order to give effect to the above, the following questionnaire must be completed and submitted with the bid.

Item	Question	Yes	No
4.1	Is the bidder or any of its directors listed on the National Treasury's Database of Restricted Suppliers as companies or persons prohibited from doing business with the public sector? (Companies or persons who are listed on this Database were informed in writing of this restriction by the Accounting Officer/Authority of the institution that imposed the restriction after the *audi alteram partem* rule was applied). **The Database of Restricted Suppliers now resides on the National Treasury's website(www.treasury.gov.za) and can be accessed by clicking on its link at the bottom of the home page.**	Yes ☐	No ☐
4.1.1	If so, furnish particulars:		
4.2	Is the bidder or any of its directors listed on the Register for Tender Defaulters in terms of section 29 of the Prevention and Combating of Corrupt Activities Act (No 12 of 2004)? **Register for Tender Defaulters can be accessed on the National Treasury's website (www.treasury.gov.za) by clicking on its link at the bottom of the home page.**	Yes ☐	No ☐

4.2.1	If so, furnish particulars:		
4.3	Was the bidder or any of its directors convicted by a court of law (including a court of law outside the Republic of South Africa) for fraud or corruption during the past five years?	Yes ☐	No ☐
4.3.1	If so, furnish particulars:		
Item	**Question**	**Yes**	**No**
4.4	Does the bidder or any of its directors owe any municipal rates and taxes or municipal charges to the municipality / municipal entity, or to any other municipality / municipal entity, that is in arrears for more than three months?	Yes ☐	No ☐
4.4.1	If so, furnish particulars:		
4.5	Was any contract between the bidder and the municipality / municipal entity or any other organ of state terminated during the past five years on account of failure to perform on or comply with the contract?	Yes ☐	No ☐
4.7.1	If so, furnish particulars:		

CERTIFICATION

I, THE UNDERSIGNED (FULL NAME) ……..……..…… CERTIFY THAT THE INFORMATION FURNISHED ON THIS DECLARATION FORM IS TRUE AND CORRECT.

I ACCEPT THAT, IN ADDITION TO CANCELLATION OF A CONTRACT, ACTION MAY BE TAKEN AGAINST ME SHOULD THIS DECLARATION PROVE TO BE FALSE.

……... ……..
Signature Date

…… ……..
POSITION **NAME OF BIDDER**

VICTORIA WEST– UPGRADING OF GROUNDWATER SUPPLY

TENDER NO. UB/VW/23/2022

SCHEDULE N : CERTIFICATE OF INDEPENDENT BID DETERMINATION (MBD 9)

CERTIFICATE OF INDEPENDENT BID DETERMINATION

1 This Municipal Bidding Document (MBD) must form part of all bids[1] invited.

2 Section 4 (1) (b) (iii) of the Competition Act No. 89 of 1998, as amended, prohibits an agreement between, or concerted practice by, firms, or a decision by an association of firms, if it is between parties in a horizontal relationship and if it involves collusive bidding (or bid rigging).[2] Collusive bidding is a *pe se* prohibition meaning that it cannot be justified under any grounds.

3 Municipal Supply Regulation 38 (1) prescribes that a supply chain management policy must provide measures for the combating of abuse of the supply chain management system, and must enable the accounting officer, among others, to:

a. take all reasonable steps to prevent such abuse;

b. reject the bid of any bidder if that bidder or any of its directors has abused the supply chain management system of the municipality or municipal entity or has committed any improper conduct in relation to such system; and

c. cancel a contract awarded to a person if the person committed any corrupt or fraudulent act during the bidding process or the execution of the contract.

4 This MBD serves as a certificate of declaration that would be used by institutions to ensure that, when bids are considered, reasonable steps are taken to prevent any form of bid-rigging.

5 In order to give effect to the above, the attached Certificate of Bid Determination (MBD 9) must be completed and submitted with the bid:

[1] Includes price quotations, advertised competitive bids, limited bids and proposals.

[2] Bid rigging (or collusive bidding) occurs when businesses, that would otherwise be expected to compete, secretly conspire to raise prices or lower the quality of goods and / or services for purchasers who wish to acquire goods and / or services through a bidding process. Bid rigging is, therefore, an agreement between competitors not to compete.

MBD 9

CERTIFICATE OF INDEPENDENT BID DETERMINATION

I, the undersigned, in submitting the accompanying bid:

_____

(Bid Number and Description)

in response to the invitation for the bid made by:

_____

(Name of Municipality / Municipal Entity)

do hereby make the following statements that I certify to be true and complete in every respect:
I certify, on behalf of:_____that:

(Name of Bidder)

1. I have read and I understand the contents of this Certificate;
2. I understand that the accompanying bid will be disqualified if this Certificate is found not to be true and complete in every respect;
3. I am authorized by the bidder to sign this Certificate, and to submit the accompanying bid, on behalf of the bidder;
4. Each person whose signature appears on the accompanying bid has been authorized by the bidder to determine the terms of, and to sign the bid, on behalf of the bidder;
5. For the purposes of this Certificate and the accompanying bid, I understand that the word "competitor" shall include any individual or organization, other than the bidder, whether or not affiliated with the bidder, who:
   (a) has been requested to submit a bid in response to this bid invitation;
   (b) could potentially submit a bid in response to this bid invitation, based on their qualifications, abilities or experience; and
   (c) provides the same goods and services as the bidder and/or is in the same line of business as the bidder
6. The bidder has arrived at the accompanying bid independently from, and without consultation, communication, agreement or arrangement with any competitor. However communication between partners in a joint venture or consortium[3] will not be construed as collusive bidding.
7. In particular, without limiting the generality of paragraphs 6 above, there has been no consultation, communication, agreement or arrangement with any competitor regarding:
   (a) prices;
   (b) geographical area where product or service will be rendered (market allocation)
   (c) methods, factors or formulas used to calculate prices;
   (d) the intention or decision to submit or not to submit, a bid;

(e) the submission of a bid which does not meet the specifications and conditions of the bid; or

(f) bidding with the intention not to win the bid.

8. In addition, there have been no consultations, communications, agreements or arrangements with any competitor regarding the quality, quantity, specifications and conditions or delivery particulars of the products or services to which this bid invitation relates.
9. The terms of the accompanying bid have not been, and will not be, disclosed by the bidder, directly or indirectly, to any competitor, prior to the date and time of the official bid opening or of the awarding of the contract.

[3] Joint venture or Consortium means an association of persons for the purpose of combining their expertise, property, capital, efforts, skill and knowledge in an activity for the execution of a contract.

10. I am aware that, in addition and without prejudice to any other remedy provided to combat any restrictive practices related to bids and contracts, bids that are suspicious will be reported to the Competition Commission for investigation and possible imposition of administrative penalties in terms of section 59 of the Competition Act No 89 of 1998 and or may be reported to the National Prosecuting Authority (NPA) for criminal investigation and or may be restricted from conducting business with the public sector for a period not exceeding ten (10) years in terms of the Prevention and Combating of Corrupt Activities Act No 12 of 2004 or any other applicable legislation.

……	……
Signature	Date
…….	……
Position	Name of Bidder

VICTORIA WEST– UPGRADING OF GROUNDWATER SUPPLY

TENDER NO. UB/VW/23/2022

SCHEDULE O : COMPANY RELATED WORK EXPERIENCE

The experience of the respondent as a company (as opposed to key staff members) on works of similar nature.

The information shall be within the previous **5 years** and can include contracts that are not complete prior to closing date for submissions.

*Completed projects stated in summarised table must be confirmed by FINAL COMPLETION CERTIFICATE attached to be recognised as a “Successful Project”. Projects not confirmed by final completion certificates will not be considered.

NOTE: ONLY THE FOLLOWING TABLES, COMPLETED BY HAND, WILL BE CONSIDERED IN THE EVALUATION. NO ATTACHED EXPERIENCE INFORMATION EXCEPT COMPLETION CERTIFICATES WILL BE CONSIDERED.

**NB. STAPLE COMPANY PROFILE TO THIS PAGE!

Signed ..... Date .....

Name ..... Position .....

Tenderer .....

Project 1

Employer: ……..…… **Contact Person:** ……..…… **Telephone Number:** ……..…… **E-mail:** ……..……	**Contract Start Date:** …… **Completion Date/ Expected Completion:** ……..……..
Works Description:	
Contract Value/ Final Certification (Including VAT): ……	

Project 2

Employer: ……..……. **Contact Person:** ……..……. **Telephone Number:** ……..……. **E-mail:** ……..……	**Contract Start Date:** ……. **Completion Date/ Expected Completion:** ……..……..
Works Description:	
Contract Value/ Final Certification (Including VAT): ……	

Project 3

Employer: ……..…… **Contact Person:** ……..……. **Telephone Number:** ……..……. **E-mail:** ……..……	**Contract Start Date:** ……. **Completion Date/ Expected Completion:** ……..……..
Works Description:	
Contract Value/ Final Certification (Including VAT): ……	

Project 4

Employer: …… **Contact Person:** …… **Telephone Number:** ……..… **E-mail:** ……..…	**Contract Start Date:** …….. **Completion Date/ Expected Completion:** ……..……..
Works Description:	
Contract Value/ Final Certification (Including VAT): ……	

VICTORIA WEST– UPGRADING OF GROUNDWATER SUPPLY

TENDER NO. UB/VW/23/2022

SCHEDULE P : KEY STAFF COMPETENCE

The competence of Key Personnel will be evaluated in relation to the scope of work from three different points of view:

The Tenderer must submit Proposed Team Structure, identifying Contract Manager, Site Agent, General Foreman and OHS Practitioner as key personnel. Certified qualifications for each key personnel must be attached for determination of points to be allocated as per the table below:

Key Personnel	Target Goals	Point Allocation
Contract Manager	Proof of certified qualification of BEng/ BSc/ BTech in Civil Engineering of higher	10
	Proof of certified qualification of National Diploma in Civil Engineering of higher	5
	Less than above	2
Site Agent	Proof of certified qualification of BEng/ BSc/ BTech in Civil Engineering of higher	5
	Proof of certified qualification of National Diploma in Civil Engineering of higher	3
	Less than above	1
OHS Practitioner	Accredited OHS Qualification by SAIOSH and SACPCMP or any recognised accredited organisation	3
	Less than above	1
General Foreman	Trade qualification NQF 4 – Labour intensive	2
	Less than above	1

**NB. STAPLE PROOF OF QUALIFICATION'S TO THIS PAGE!

VICTORIA WEST– UPGRADING OF GROUNDWATER SUPPLY

TENDER NO. UB/VW/23/2022

SCHEDULE Q : EXPERINCE OF KEY STAFF

The experience of Key Personnel will be evaluated in relation to the scope of work from three different points of view:

The Tenderer must submit Proposed Team Structure, identifying Contract Manager, Site Agent, General foreman and OHS Practitioner as key personnel. Copies of a comprehensive CVs (not more than 5 pages) with contactable references, clearly outlining the years of related experience for each key personnel must be attached for determination of points to be allocated as per the table below:

Key Personnel	**Target Goals**	**Point Allocation**
Contract Manager	10 years or more	5
	5 to 9 years	3
	Less than 5 years	1
Site agent	10 years or more	4
	5 to 9 years	2
	Less than 5 years	1
OHS Practitioner	10 years or more	3
	5 to 9 years	2
	Less than 5 years	1
General Foreman	10 years or more	3
	5 to 9 years	2
	Less than 5 years	1

**NB. STAPLE PROOF OF CV'S PAGE!

VICTORIA WEST– UPGRADING OF GROUNDWATER SUPPLY

TENDER NO. UB/VW/23/2022

SCHEDULE R : PROPOSED PROGRAM

The Tenderer must submit Proposed Program of Works for the project, clearly outline the main activities and timeframe from start to end of the project.

The program should comply with the following but not limited:

- Program in Gant Chart format
- Program outline the proposed program of all main construction activities
- Clear activity start and end dates and activity duration

****NB. STAPLE PROPOSED CONSTRUCTION PROGRAM TO THIS PAGE!**

VICTORIA WEST– UPGRADING OF GROUNDWATER SUPPLY

TENDER NO. UB/VW/23/2022

SCHEDULE S : BANK RATING

NB. This schedule is used in evaluating Responsiveness and Financial Risk

Tenderers must attach a valid, up to date and original stamped letter from the Tenderer's bank stating the Tenderer's financial standing / bank rating based on the amount or higher tendered for this contract. The amount or higher tendered MUST therefore be stated on the letter and MUST correspond with the tendered amount or higher amount as tendered.

The bidder shall provide the following details of his banker and the operational bank account registered in the name of the Bidder for verification purposes:

Name of Account Holder:_____

Name of bank:_____Branch:_____

Account Number:_____Type of Account:_____

Telephone Number:_____Facsimile Number:_____

Name of Contact Person (at bank):_____

In the case of Joint Ventures or Associations, details of the bank account of the lead-partner whose account will be used in the execution of the project shall be provided.

Bank Ratings are interpreted as follows:

A - Undoubted for amount of enquiry
B - Good for amount of enquiry
C - Good for amount quoted, if strictly in way of business
D - Fair trade risk for amount quoted
E - Figure considered too high
F - Financial position unknown or new account with no history
G - Dishonest on record
H - Frequently dishonest
Savings - Bank Report cannot be obtained on a Savings Account (High Risk)

NB.

Failure by the Tenderer to provide the required bank details and original bank rating letter with his Tender, will lead to the conclusion that the Tenderer does not have the necessary financial resources at his disposal to complete the contract successfully within the specified time for completion and will be disqualified for being non-responsive.

The Employer undertakes to treat the information thus obtained as confidential, strictly for the use of evaluation of the Tender submitted by the Tenderer.

Signed ..... Date .....

Name ..... Position .....

Tenderer .....

**NB. STAPLE PROOF TO THIS PAGE!

VICTORIA WEST– UPGRADING OF GROUNDWATER SUPPLY

TENDER NO. UB/VW/23/2022

SCHEDULE T: PLANT AND EQUIPMENT

Scoring of the bidder's plant and equipment will be based on the following criteria:

TLB	≥ 3 TLB's	5
	≤ 1 TLB's	2
	no TLB	0
Bakkie	≥ 2 Bakkies	1
	No Bakkie	0
Hand compactor	≥ 3 Hand compactor	1
	≥1 Hand compactor	0.5
	no Hand compactor	0
Water Tanker	≥1 Water tanker	1
	No Water tanker	0
Tipper Truck	≥ 3 Tipper Trucks	2
	≤ 1 Tipper truck	1
	No tipper truck	0

The following are lists of major items of relevant equipment that the Tenderer presently own (Table (a) below) **(attach hereto proof ownership, e.g. copy of vehicle registration form, etc)** or lease (Table (b) below) **(attach confirmation/ agreement from supplier stipulating plant to be leased)** and will have available for this contract or will acquire or hire for this contract if my/our Tender is accepted.

(a) Details of major equipment that is owned and immediately available for this contract.

DESCRIPTION (type, size, capacity etc)	QUANTITY	YEAR OF MANUFACTURE

DESCRIPTION (type, size, capacity etc)	QUANTITY	YEAR OF MANUFACTURE

Attach additional pages if more space is required

(b) Details of major equipment that will be hired, or acquired for this contract if Bid is accepted. Agreement with supplier to be attached.

DESCRIPTION (type, size, capacity, etc.)	QUANTITY	HOW ACQUIRED	
		HIRE/ BUY	SOURCE

Attach additional pages if more space is required

The Tenderer undertakes to bring onto site without additional cost to the Employer any additional plant not listed but which may be necessary to complete the contract within the specified contract period.

Signed ..... Date .....

Name ..... Position .....

Tenderer .....

VICTORIA WEST– UPGRADING OF GROUNDWATER SUPPLY

TENDER NO. UB/VW/23/2022

C1.3 : PROCUREMENT

C1.3.1 PREFERENTIAL PROCUREMENT PROCEDURES

C1.3.2 Requirements

The following are conditions by the Employer regarding procurement of the project and will be utilised to adjudicate tenders.

C1.3.3 ACCEPTANCE OR REJECTION OF TENDERS

The Employer does not bind himself to accept the lowest or any tender and reserves the right to accept any tender. No reason for the acceptance or rejection of any tender will be given.

Tenders are considered in terms of the Preferential Procurement Regulations 2011.

C1.3.4 Tax Clearance Certificate

The Tenderer shall submit a valid original Tax Clearance Certificate from the South African Revenue Service ("SARS") certifying the taxes of the Tenderer to be in order or that suitable arrangements have been made with SARS, as stipulated in Regulation 16.

Failure to submit the Tax Clearance Certificate will result in the tender being rendered incomplete and the tender will be rejected.

C1.3.5 Employment Targets

C1.3.5.1 Employment of Local Community Labour

The maximum possible number of workers is to be employed from the currently unemployed persons in the local community.

To this end the Contractor is required to give preference to the use of local community labour and limit the use of non-local to key personnel only.

Key personnel are defined as supervisors and skilled labourers without whom a specific task cannot be executed. As far as possible these people should impart their management and building skills to individuals within the community workforce.

C1.4: CONTRACT DATA

The Conditions of Contract are the General Conditions of Contract for Construction Works (2015) published by the South African Institution of Civil Engineering (SAICE).

Copies of these conditions of contract may be obtained from the SAICE Tel no.: (0)11 805 5947.

The General Conditions of Contract for Construction Works make several references to the Contract Data. The Contract Data shall have precedence in the interpretation of any ambiguity or inconsistency between it and the General Conditions of Contract.

Each item of data given below is cross-referenced to the clause in the General Conditions of Contract for Construction Works to which it mainly applies.

PART 1 : DATA PROVIDED BY THE EMPLOYER

Clause	Description
1.1.1.15 1.2.1.2	The Employer is Ubuntu Local Municipality The Employer's address for receipt of communications and notices is : Telephone: 053 631 0891 Address : 78 Church Street Victoria West 7070 Contact Person: Mr D. Molaole
1.1.1.16 1.2.1.2	The Engineer is iX engineers (Pty) Ltd The Engineer's address for receipt of communications and notices is : Telephone: 053 830 0460 E-mail : ambrose.k@ixengineers.co.za Address (Postal): PO Box 50 KIMBERLEY 8300 Address (Physical): 10 Oliver Road Monument Heights KIMBERLEY 8301 Contact Person: Mr. A. Khumalo
1.3.2	The governing law is the law of the Republic of South Africa.
1.1.1.12 and 5.8	The special non-working days are public holidays, Sundays and the year-end break. These days will be excluded from time calculations.
5.8	The year-end break will be taken as the days between 16 December 2022 and 02 January 2023.
3.2.2	The Engineer is required to obtain the specific approval of the Employer before executing any of the following functions or duties: a) The issuing of a variation order in terms of clause 6.3.2

Clause	Description
4.3.1	Employer, Labour and Occupational Health and Safety compliance required.
6.2	A performance guarantee as security is Not Applicable. 10% Retention will be withheld by the Employer from payments to the Contractor.
5.2	The Contractor shall commence executing the Works within 14 days from the Commencement Date. Commencement Date shall be the date on which an appointment letter or letter of intent is submitted to the successful contractor.
5.6.1	The Contractor shall deliver his programme of work within 14 days from the Commencement Date.
5.13.1	The penalty for failing to complete the Works is R 2 500 (Two Thousand Five Hundred Rand) per day. No maximum limit.
6.8.2	Contract price adjustment will not be applicable and work will be done in one phase, no phased payment will be done. Payment will be done within 30 day after the payment certificate are approved and submitted to the Employer.
6.8.3	Not applicable.
6.10.3	A Retention Money Guarantee is not permitted. The percentage retention on the amounts due to the Contractor is 10%. The limit of retention money is 10% of the contract price and no interest shall be payable to the Contractor upon money withheld.
7.8	The Defects Liability Period is 12 months measured from the date of the Certificate of Completion.
10.5	Dispute resolution shall be by mediation
Additional Clauses	
11	**Non-compliance with Engineer's Instructions** Should the Contractor fail within reasonable time to carry out the Engineer's instructions regarding any matter whatsoever on which he is authorized to order and direct the Contractor, then without vitiating the Contract and without prejudice to any other remedy the Employer may have under the Contract, the Employer may, after serving notice of its intention on the Contractor, itself take such action or employ others to take such action on its behalf as the Contractor has failed to take on the Engineer's instructions. For this purpose the Employer may use any suitable plant or materials brought on Site by the Contractor. The cost to the Employer of taking action on account of the Contractor's failure to carry out the Engineer's instructions shall be for the Contractor's account and may be recovered from the Contractor by the Employer, but such work shall be valued as if performed by the Contractor in terms of the Contract at Contract rates and included in the payments due to the Contractor.

Clause	Description
12	**Implementation of the Occupational Health and Safety Act No. 85 of 1993** The Employer and the Contractor hereby agree, in terms of the provisions of Section 37(2) of the Occupational Health and Safety Act, Act no. 85 of 1993 and the relevant Regulations made thereunder, with specific reference to the Construction Regulations of 2014, hereinafter referred to as "the Act", that the Contractor as an Employer in its own right and in its capacity as Contractor for the execution of the Works, shall have certain obligations and that the following arrangement shall apply between them to ensure compliance by the Contractor with the provisions of the Act, namely: i)The Contractor undertakes to acquaint the appropriate officials and the employees of the Contractor with all the relevant provisions of the Act, and the regulations promulgated in terms of the Act, and ii)The Contractor undertakes that all relevant duties, obligations and prohibitions imposed in terms of the Act and regulations will be fully complied with, and iii)The Contractor shall be obliged to report forthwith to the Employer any investigation, complaint, or criminal charge which may arise as a consequence of the provisions of the Act and regulations pursuant to work performed on behalf of the Employer, and shall, on written demand, provide full details in writing of such investigation, complaint or criminal charge.
13	**Employment of Labour Force** The Contractor shall employ all unskilled labourers required for the execution of the Contract locally from the local residents. The minimum wage for unskilled labourers shall be in accordance with the Basic Conditions of Employment Act, No. 75 of 1997, as published in the Government Gazette from time to time for the Civil Engineering Sector, and for the specific Magisterial District.
14	**EXTENSION OF TIME FOR ABNORMAL RAINFALL** Extension of time in respect of Clause 5.12 in respect of abnormal rainfall shall be calculated using the following formula for each calendar month or part thereof: $V = (Nw - Nn) + \frac{Rw - Rn}{X}$ Where: V = Extension of time in calendar days in respect of the calendar month under consideration. Nw = Actual number of days during the calendar month on which a rainfall of 10 mm or more has been recorded. Nn = Average number of days in the relevant calendar month, as derived from existing rainfall records, as stated in the Site Information, on which a rainfall of 10 mm or more has been recorded for the calendar month. Rw = Actual rainfall in mm recorded for the calendar month under consideration. Rn = Average rainfall in mm for the calendar month as derived from existing rainfall records as stated in the Site Information.
	For the purpose of this Contract the values of Nn, Rn and X shall be those assigned to them in the Description of Works – Abnormal Rainfall . If V is negative and its absolute value exceeds Nn, then V shall be taken as equal to minus Nn. The total extension of time shall be the algebraic sum of all monthly totals for the period under consideration, but if the total is negative the time for completion shall not

Clause	Description
	be reduced due to subnormal rainfall. Extension of time for part of a month shall be calculated using pro rata values of Nn and Rn. This formula does not take into account flood damage which could cause or concurrent delays and will be treated separately as far as extension of time is concerned. The factor (Nw – Nn) shall be considered to represent a fair allowance for variations from the average in the number of days during rainfall exceeds 10 mm. The factor (Rw – Rn) shall be considered to represent a fair allowance for variations from the average in the number of days which the rainfall did not exceed 10 mm but wet conditions prevented or disrupted work. For the purpose of applying the formula, accurate rain gauging shall be taken at a suitable point on the Site and the Contractor shall at his own expense, take all necessary precautions to ensure that rain gauges cannot be interfered with by unauthorised persons.

VICTORIA WEST– UPGRADING OF GROUNDWATER SUPPLY

TENDER NO. UB/VW/23/2022

PART C2: PRICING DATA

C2.1 Pricing Instructions

C2.2 Bill of Quantities

VICTORIA WEST– UPGRADING OF GROUNDWATER SUPPLY

TENDER NO. UB/VW/23/2022

C2.1: PRICING INSTRUCTIONS

C2.1.1 PREAMBLE TO THE BILLS OF QUANTITIES

C2.1.1.1 All prices shall be quoted in the currency of the Republic of South Africa and will be held to be firm unless otherwise stated, in which case sufficient information must be afforded at the time of tendering to indicate the basis on which payments shall be adjusted.

C2.1.1.2 The tenderer shall enter a price against each item in the schedule of prices. If the tenderer fails to enter a price against any item in the schedule of prices the relevant cost for such item shall be regarded as being covered by other prices in the schedule of prices.

C2.1.1.3 The prices quoted against each item of these schedules shall cover the full inclusive cost, value added tax excluded, of everything required for the execution of the work under the item plus an apportionment of any costs involved in meeting the obligations and liabilities.

C2.1.1.4 The tenderers shall calculate value added tax and enter it at the end of the summary of the schedule of prices.

C2.1.1.5 The prices quoted for the supply of plant and equipment shall include for all handling, loading, transporting and off-loading required for the delivery of the plant and equipment to the site, including in the case of off-site storage for double handling at the store.

C2.1.1.6 The prices quoted for erection and/or installation shall include for all handling, loading, transporting and off-loading to take plant and equipment to place on site where required, erection, installation, painting, guaranteeing for a period of twenty four (24) months and upholding for a period of twelve (12) months, all as specified.

C2.1.1.7 The prices quoted for commissioning of plant include for operating, mechanical and electrical testing, adjusting and handling over in a proper working order and for the provision of operating and maintenance manuals, where applicable.

C2.1.1.8 Any additional charges in connection with off-site storage which there may be over and above the prices quoted in the various sections of this schedule of prices shall be set-out in detail by the tenderer.

C2.1.1.9 The work of installation, erection and testing of the plant and equipment shall as far as possible be carried out in one continuous operation and the cost of transporting personnel between the Contractors' headquarters and the site will be paid at the quotation amount for same for only one return trip for such continuous operation. No additional payment will be made for any weekend or holiday trips back to the Contractor's headquarters. Additional trips for personnel will only be paid for if authorised, or when requested by the Engineer in writing.

C2.1.1.10 Amounts allowed for contingencies will be spent in part or as a whole at the sole discretion of the Engineer.

TENDER NO. UB/VW/23/2022 **SCHEDULE A: PRELIMINARY AND GENERAL**

ITEM NO	PAYMENT	DESCRIPTION	UNIT	QTY	RATE	AMOUNT R
	SABS 1200 A	**PRELIMINARY AND GENERAL**				
A.1	8,3	**FIXED-CHARGE AND VALUE-RELATED ITEMS**				
A.1.1	8.3.1	Contractual requirements	Sum	1		
	8.3.2	Establish facilities on the Site:				
	8.3.2.1	a) Facilities for Engineer (SABS 1200 AB)				
A.1.2	PS AB 3.1	Nameboard (MIG 2.4m x 1.25)	No	2		
A.1.3	PS AB 3.2	Engineer's office and facilities	Sum	1		
		01.Furnished Office				
		.02 Telephone/Cell Phone of 800/month	Sum	2		
		.03 Site instruction Book	Sum			
	8.3.2.2	b) Facilities for Contractor				
A.1.4		Offices and storage sheds	Sum	1		
A.1.5		Workshops	Sum	1		
A.1.6		Laboratories	Sum	1		
A.1.7		Living accommodation	Sum	1		
A.1.8		Ablution and latrine facilities	Sum	1		
A.1.9		Tools and equipment	Sum	1		
A.1.10		Water supplies, electric power and communications	Sum	1		
A.1.11		Dealing with water	Sum	1		
A.1.12		Access	Sum	1		
A.1.13		Plant	Sum	1		
A.1.14	8.3.3	Other fixed-charge obligations (Specify)	Sum	1		
A.1.15	8.3.4	Remove Engineer's and Contractor's Site establishment on completion	Sum	1		
A.2	8,4	**TIME-RELATED ITEMS**				
A.2.1	8.4.1	Contractual Requirements	Sum	1		
	8.4.2	Operation and maintenance of facilities on site for duration of construction				
TOTAL CARRIED FORWARD						

ITEM NO	PAYMENT	DESCRIPTION	UNIT	QTY	RATE	AMOUNT R
BROUGHT FORWARD						
	8.4.2.1	a) Facilities for Engineer for duration of construction (SABS 1200)				
A.2.2	PS AB 3.1	Nameboard (One)	Sum	1		
A.2.3	PS AB 3.2	Engineer's office and facilities	Sum	1		
	8.4.2.2 & PS AB	b) Facilities for Contractor for duration of construction, except where otherwise stated				
A.2.4		Offices and storage sheds	Sum	1		
A.2.5		Workshops	Sum	1		
A.2.6		Living accommodation	Sum	1		
A.2.7		Ablution and latrine facilities	Sum	1		
A.2.8		Tools and equipment	Sum	1		
A.2.9		Water supplies, electric power and communications	Sum	1		
A.2.10		Dealing with water	Sum	1		
A.2.11		Access	Sum	1		
A.2.12		Plant	Sum	1		
A.2.13	8.4.3	Supervision	Sum	1		
A.2.14	8.4.4	Company and head office overhead costs	Sum	1		
A.2.15	8.4.5	Other time-related obligations (Specify)	Sum	1		
A.3	8,5	**SUMS STATED PROVISIONIALLY BY ENGINEER**				
	8,5	For work to be done by a nominated subcontractor				
A.3.1	PS A 8.5.1	Community Liaison Officer	PC Sum	1	44 000,00	44 000,00
A.3.2	PS A 8.5.2	Charge required by Contractor on sub-item above	%		44 000,00	
TOTAL CARRIED FORWARD						

TENDER NO. UB/VW/23/2022 **SCHEDULE A: PRELIMINARY AND GENERAL**

ITEM NO	PAYMENT	DESCRIPTION	UNIT	QTY	RATE	AMOUNT R
BROUGHT FORWARD						
A.3.3	PS A 8.5.3	Additional Material Testing by Commercial Laboratories	PC Sum	1	15 000,00	15 000,00
A.3.4	PS A 8.5.4	Charge required by Contractor on sub-item above	%		15 000,00	
A.3.5	PS A 8.5.5	Mechanical and Electrical work to be completed by Sub-contractor.	PC Sum	1	100 000,00	100 000,00
A.3.6	PS A 8.5.6	Charge required by Contractor on sub-item above	%		100 000,00	
A.3.7	8.3.5	As-Built information based on data from a registered land surveyor to include exisitng and constructed inftastructure	Sum	1		
A.4	8,8	**TEMPORARY WORKS**				
A.4.1	PS A 8.8.2	Accommodation of traffic	Sum	1		
A.4.2	PS A 8.8.4	Existing services	Sum	1		
A.5	PS A 8.9	**OCCUPATIONAL HEALTH AND SAFETY (PROVISIONAL)**				
A.5.1	PS A 8.9.1	Cost of health and safety measures in terms of the Construction Regulations (2014) of the Occupational Health and Safety Act	Sum	1		
A.5.2	PS A 8.9.2	Compilation and maintenace of a Health and Safety Plan, including Risk Assesments, Safe Works Procedures and Methods Statements	Sum	1		
A.5.3	PS A 8.9.3	Compilation and maintenance of the Health and Safey File	Sum	1		
A.6		**ENVIRONMENTAL MANAGEMENT**				
A.6.1	PS A 8.3.6	Requirements in terms of the Environmental Management Programme	Sum	1		
TOTAL CARRIED FORWARD TO SUMMARY						

TENDER NO. UB/VW/23/2022 **SCHEDULE B: SITE CLEARANCE**

ITEM NO	PAYMENT	DESCRIPTION	UNIT	QTY	RATE	AMOUNT R
B.1	SABS 1200 C	**SITE CLEARANCE**				
	PS C 8.2.1	Clear and grub for:				
B.1.1		Pipelines	m	4 500		
B.1.2		Farm connection pipes	m	20		
B.1.3		Areas around boreholes	ha	0,01		
B.1.4		Areas for tanks	ha	0,01		
	8.2.3	Remove and grub large trees and tree stumps of girth				
		Over and Up to				
B.1.5		0,0 m 0,5 m	No	5		
B.1.6		0,5 m 1,0 m	No	0		Rate Only
B.1.7	PS C 8.2.11	Remove and re-erect existing fences	m	12		
B.1.8	PS C 8.2.12	Site demarcation along pipeline route	m	1 865		
TOTAL CARRIED FORWARD TO SUMMARY						

ITEM NO	PAYMENT	DESCRIPTION	UNIT	QTY	RATE	AMOUNT R
	SABS 1200D	**EARTHWORKS**				
C.1	8.3.2	**EXCAVATION**				
	PS DB 8.3.2(a)	Excavate in all materials for trenches, select, backfill, compact and dispose of all surplus material for main pipes with:				
		Dia up to 250 mm for depths:				
		Over and Up to				
C.1.1		0,5 m 1,0 m	m	3 000		
C.1.2		1,0 m 1,5 m	m	1 000		
C.1.3		1,5 m 2,0 m	m	500		
C.1.4		2,0 m 2,5 m	m	30		
C.1.5		2,5 m 3,0 m	m	3		Rate Only
	PS DB 8.3.2(a)	Excavate in all materials for trenches, select, backfill, compact and dispose of all surplus material for water connection pipes for depths:				
		Dia up to 75 mm for depths:				
		Over and Up to				
C.1.6		0,5 m 1,0 m	m	20		
	PS DB 8.3.2(a)	Excavate in all materials for trenches up to 800 mm wide, select, backfill, compact and dispose of all surplus material for electrical cables for depths:				
		Over and Up to				
C.1.7		0,5 m 1,0 m	m	1		Rate Only
	8.3.2(b)	Extra-over items C.1.1 to C.1.7 for (provisional):				
C.1.8		Intermediate excavation	m^3	100		
C.1.9		Hard rock excavation	m^3	30		
C.1.10	PS DB 8.3.2(c)	Excavate unsuitable material from trench bottom (provisional)	m^3	20		
C.1.11	PS D 8.3.8.1(c)	Hand excavation to expose existing services	m^3	15		
TOTAL CARRIED FORWARD						

TENDER NO. UB/VW/23/2022 **SCHEDULE C: BULK WATER SUPPLY**

ITEM NO	PAYMENT	DESCRIPTION	UNIT	QTY	RATE	AMOUNT R
BROUGHT FORWARD						
C.1.12	PS DB 8.3.2(d)	Hand excavation and backfill	m³	20		
C.1.13	PS DB 8.3.2(e)	Extra-over PS DB 8.3.2(a) for temporary stockpiling of material	m³	5		Rate Only
C.2	8.3.3	**EXCAVATION ANCILLARIES**				
	PS DB 8.3.3.1	Make up deficiency in backfill material				
C.2.1	8.3.3.1(b)	From trench excavation	m³	5		
C.2.2	8.3.3.1(c)	From commercial sources	m³	5		
C.2.3	8.3.3.3	Compaction in road reserves	m³	10		
	8.3.3.4	Overhaul				
C.2.4		Limited overhaul	m³	210		
C.2.5		Long overhaul	m³.km	40		
C.2.6	PS DB 8.3.8	Remove, stockpile and replace 150 mm topsoil	m³	150		
C.3	8.3.5	**EXISTING SERVICES**				
	PS DB 8.3.5(a)	Services that intersect a trench				
C.3.1		High voltage overhead power lines	No	2		
C.3.2		High voltage underground electrical cables	No	2		
C.3.3		Low voltage underground electrical cables	No	2		
C.3.4		Water main pipes	No	3		
C.3.5		Cattle fence	No	2		
C.3.6		Security fence	No	2		
TOTAL CARRIED FORWARD						

ITEM NO	PAYMENT	DESCRIPTION	UNIT	QTY	RATE	AMOUNT R
BROUGHT FORWARD						
	PS DB 8.3.5(b)	Services that adjoin a trench				
C.3.7		Cattle fence	m	112		
C.3.8		Security fence	m	7		
C.3.9		Existing borehole	No	1		
C.4	PS DB 8.3.6	FINISHINGS				
	8.3.6.1	Reinstate road surfaces complete with all layers				
C.4.1		150 mm G5 gravel wearing course	m²	20		
	PS DB 8.3.6.2	Extra-over DB 8.3.6.1 for imported material for:				
C.4.2		150 mm G5 gravel wearing course	m³	0,8		
C.5	SABS 1200 LB	**BEDDING (PIPES)**				
	8.2.1	Provision of bedding material compacted to 93% of MAASHTO density (100% for sand) with material from trench excavation				
C.5.1		Selected granular material	m³	19		
C.5.2		Selected fill material	m³	61		
	8.2.2.3	Provision of bedding material compacted to 93% of MAASHTO density (100% for sand) with material from commercial sources				
C.5.3		Selected granular material	m³	400		
C.5.4		Selected fill material	m³	1 300		
C.5.5	PS LB 8.2.2.3	Bedding for wet conditions	m³	10		
C.5.6	PS LB 8.2.6	Bedding for cables	m	5		Rate Only
TOTAL CARRIED FORWARD						

ITEM NO	PAYMENT	DESCRIPTION	UNIT	QTY	RATE	AMOUNT R
BROUGHT FORWARD						
C.6	SABS 1200 L 8.2.1 & PS L 8.2.10	**MEDIUM-PRESSURE PIPELINES** Supply, lay and bed Class 9 uPVC pipes on class C bedding, test and disinfect the following pipes:				
C.6.1		75 mm dia Class 9	m	800		
C.6.2		110 mm dia Class 9	m	1 200		
C.6.3		160 mm dia Class 9	m	50		Rate only
C.6.4		200 mm dia Class 12	m	2 000		
	8.2.1 & PS L 8.2.10	Supply, lay and bed HDPE pipe on Class C bedding, test and disinfect the following pipes:				
C.6.5		32 mm dia Class 9	m	50		Rate only
C.6.6		50 mm dia Class 9	m	500		Rate only
C.6.7	PS L 8.8	Supply and install steel pipes, bends and fittings at Balancing reservoir complete as per drawing.	Sum	1		
C.7		**SPECIALS AND FITTINGS**				
	8.2.2	Supply, lay and bed on bedding according to SABS 1200 drawing LB-2, test and disinfect with necessary couplings: uPVC Class 16 bends for uPVC pipes				
C.7.1		**45° elbows:**				
C.7.1.1		110 mm dia	No	1		Rate Only
C.7.1.2		90 mm dia	No	3		
C.7.1.3		75 mm dia	No	3		
C.7.2		**22,5° elbows:**	No	2		
C.7.2.1		160 mm Dia	No	1		
C.7.2.2		110 mm dia	No	1		Rate Only
C.7.3		**11,25° elbows:**				
C.7.3.1		90 mm Dia	No	1		
C.7.3.2		50 mm Dia	No	1		
C.7.4		Cast iron Tpiece for uPVC pipes				
C.7.4.1		110 mm dia	No	2		
C.7.4.2		200 mm dia	No	3		
TOTAL CARRIED FORWARD						

ITEM NO	PAYMENT	DESCRIPTION	UNIT	QTY	RATE	AMOUNT R
BROUGHT FORWARD						
C.7.5		Cast iron reducer for uPVC pipes				
C.7.5.1		200 mm x 110 mm dia	No	3		
C.7.5.2		200 mm x 90 mm dia	No	3		
C.7.5.3		110 mm x 63	No	3		
C.7.6		Cast iron end caps for uPVC pipes				
C.7.6.1		200 mm dia	No	1		
C.7.6.2		110 mm dia	No	3		
C.7.6.3		75 mm dia	No	2		
C.7.7		50 mm dia Viking Johnson flange adaptor (for connection to Mechanical pipework at borehole)	No	1		Rate Only
C.8		**VALVES**				
	PS L 8.2.3	Supply, in valve chamber and install on concrete support, joint, include cut pipes where necessary and test complete with T-pieces and couplings where necessary				
		Plain ended sluice valves for uPVC pipes				
C.8.1		63 mm dia	No	1		
C.8.2		160 mm dia	No	1		
C.8.3		200 mm dia	No	4		
		Air valves (Bermad C70 or similar) complete according to drawing				
C.8.4		50 mm dia on 110 mm and 200 mm dia pipe	No	3		
C.8.5		Scour valves for 110mm dia and 200 mm uPVC pipes complete with fittings according to drawing.	No	2		
C.8.6	PS L 8.3	Bulk water meter for 200 mm dia uPVC pipes	No	2		
C.8.6	PS L 8.4.2	Control valve on 110 m uPVC with steel pipes, valves and fittings complete according to drawing.	No	1		
C.8.6	PS L 8.4.3	Control valve on 200 mm uPVC with steel pipes, valves and fittings complete according to drawing.	No	1		
C.8.7	PS L 8.4.4	Control valve on 50mm dia HDPe pipe with fittings complete as per detail according to drawing.	No	2		
C.8.8	PS L 8.10	Check (Non-return/reflux) valve complete as per drawing.	No	2		
TOTAL CARRIED FORWARD						

ITEM NO	PAYMENT	DESCRIPTION	UNIT	QTY	RATE	AMOUNT R
BROUGHT FORWARD						0,00
C.9		**ANCILLARIES**				
C.9.1	PS L 8.2.11	Anchor/Thrust blocks	m³	25,0		
C.10	PS L	**VALVE CHAMBERS AND MANHOLES**				
C.10.1		Valve chambers complete as per drawings for depths up to 1,5 m	No	8		
		Air valve chambers complete according to drawings for depths:				
		Over and Up to				
C.10.2		0,0 m 1,5 m	No	2		
		Scour valve chambers complete according to dwg for depths:				
		Over and Up to				
C.10.3		0,0 m 1,5 m	No	2		
C.10.4		Bulk water meter chambers complete as per drawing	No	2		
C.10.5		Control valve chamber on 50 mm dia complete according to drawing	No	1		
C.10.6		Control valve chamber 110 mm and 200 mm complete as per detail according to drawing	No	2		
C.10.7		Check (Non-return/reflux) chambers complete according to dwg	No	1		
C.11		**SUNDRIES**				
	PS L 8.2.16	Cut into and connect to existing uPVC mains with valves				
C.11.1		200 mm dia	No	4		
C.11.2	PS L	Pipeline markers	No	20		
C.11.3	PS L	Water connection for farmers to upto 75	No	2		Rate only
C.12	SABS 1200 G 8.1.2	**CONCRETE (STRUCTURAL)**				
	PS G	**CONCRETE**				
		Blinding layer in 20 MPa/19mm concrete				
		50 mm Minimum thickness for foundations	m³	5		
TOTAL CARRIED FORWARD						

ITEM NO	PAYMENT	DESCRIPTION	UNIT	QTY	RATE	AMOUNT R
BROUGHT FORWARD						
	PS G 8.4.3	Strength concrete: grade 25 MPa/19mm				
		Mass concrete to anchor inlet pipe	m³	0,5		
		Mass concrete to anchor scour pipe	m³	0,5		
		Mass concrete to anchor outlet pipe	m³	0,5		
		Additional mass concrete under foundations (on instruction of Engineer only)	m³	5		
	SABS 1200 GA 8.1.2 8.3.1	**REINFORCING** Mild Steel Bars				
C.12.1	8.1.2.2	Diameter 25 mm : Basic Price	t	0,50		
	8.1.2.3	Extra over C12.1 for steel bars with a diameter of:				
C.12.2		8 mm	t	0,10		
C.12.3		10 mm	t	0,10		
	8.3.1	High tensile steel				
C.12.4	8.1.2.2	Diameter 25 mm : Basic Price	t	0,36		
	8.1.2.3	Extra over C12.4 for steel bars with a diameter of:				
C.12.5		10 mm	t	0,02		
C.12.6		12 mm	t	0,35		
	SANS 1200 DM	**AREA AROUND GROUND TANK**				
	8.3.3(a)	Preparation and compaction of insitu material to 93% MOD AASHTO density (100% for sand)				
		Area around ground tank	m²	200		
	SANS 1200 MJ	Supply and construct surface with segmented paving inclusive of cutting of units, edge restrainer roller course levelling and 20mm sand, 150 mm G5 layer Base compacted to 95% MOD AASHTO. All inclusive of labour and material.				
		60mm Class 25 interlocking area Borehole chambers	m²	150		
		60mm Class 25 interlocking area ground tank and booster pumphouse	m²	150		
TOTAL CARRIED FORWARD TO SUMMARY						

TENDER NO. UB/VW/23/2022 **SCHEDULE D: FENCING**

ITEM NO	PAYMENT	DESCRIPTION	UNIT	QTY	RATE	AMOUNT R
D.1	PA	**NEW FENCING**				
	SANS: 2536/YM139	Supply and erection of new Vi-Secure fencing or Similar approved with aperature size of 76mm x 12mm with galvanised finish. Price all inclusice of material, labour, foundation and excavation in all materials:				
D.1.1		2,4 m high Fencing for borehole	m	500		
D.1.2		2,4 m high Fencing for tanks	m	900		
D.1.3		100mm high toughened steel shark tooth spike to be fixed to panel edge at 200mm intervals using anti vandal bolts. Spike finish to be hot dipped galvanized.	m	1400		
D.1.4		Double swing gate with locking mechanism and center fix barrel to match fence specification and material: 2.4m high x 3m wide	No	4		
	PA 8.2	Supply and erection of new razor wire fencing material according to drawing.				
D.1.5	PA 8.2(a)	Posts	No	80		Rate Only
D.1.6	PA 8.2(c)	4mm Galvanised strain wire	km	0,30		Rate Only
D.1.7	PA 8.2(d)	Diamond mesh and wire netting	m²	132		Rate Only
D.1.8	PA 8.3	New gates according to dwg	No	3		Rate Only
D.1.9	PA 8.6	Supply and erect 4,8 m x 1,2 m farm gate according to dwg.	No	0		Rate Only
D.1.10	PA 8.7	Repair of existing 1,2m cattle fencing	m	0		Rate Only
TOTAL CARRIED FORWARD TO SUMMARY						

ITEM NO	PAYMENT	DESCRIPTION	UNIT	QTY	RATE	AMOUNT R
		MECHANICAL INSTALLATIONS				
D.1		**Booster Pump House**				
D.1.1		Supply and install booster pump house complete including centrifugal pumps capable of supplying 115 m³/h at a head of 120 m, install all pipework and valves to centrifugal pumps. Pipework to be steel pipe. Valves, non-return valves, meters, etc. to be installed according to manufacturers specification.	Sum	1	R420 000,00	R420 000,00
D.2		**Borehole**				
D.2.1		Supply of four submersible borehole pump set comprising pump, electrical motor and built-in non-return valve.				
		BH 1	Sum	1		Rate Only
		BH 4	Sum	1		
		MISA	Sum	1		
		BH 16	Sum	1		
D.2.2		Supply of galvanised pipe-work and PVC borehole piping including dismantling joint as specified according to dwg.				
		BH 1	Sum	1		Rate Only
		BH 4	Sum	1		
		MISA	Sum	1		
		BH 16	Sum	1		
D.2.3		**Air Valve**				
		Supply of ND 25 mm double Orifice air valve,with anti-shock orifice meechanism, complete with isolating valve according to drawing.	No	4		
D.2.4		**Pressure Gauge**				
		Supply and install 2500kpa Pressure Gauge	No	4		
D.2.5		Supply and install ND 90 mm HDPE pipe or Ashirvad uPVC, Class 12 (minimum ID of 78 mm)				
		BH 1	m	27		Rate Only
		BH 4	m	58		
		MISA	m	80		
		BH 16	m	32		
TOTAL CARRIED FORWARD						

ITEM NO	PAYMENT	DESCRIPTION	UNIT	QTY	RATE	AMOUNT R
BROUGHT FORWARD						
D.2.6		Check Valve				
		Supply of flanged swing check valve : Refer to Drawing				
D.2.6.1		ND 100 mm	No	2		
D.2.6.2		ND 50 mm	No	2		
D.2.7		Gate Valve				
		Supply and install flanged resilient seated gate valve:				
D.2.7.1		ND 100 mm	No	2		
D.2.7.2		ND 50 mm	No	2		
D.2.8		Water Meter				
		Supply Flanged eletrometromagnetic water meter with reading unit and screen mounted on meter. The meter must be capable of measuring flows of between 0,5 m3/h and 90 m3/h:				
D.2.8.1		ND 100 mm	No	2		
D.2.8.2		ND 50 mm	No	2		
D.2.9		Flow control valve				
D.2.9.1		Supply CLA-VAL 40-01 Flow control valve, complete with orifice plate assembly and flow switch: Refer to Drawing	No	4		
D.2.10.1		Electronic working drawing which are to be submitted for approval and used for manufacturing and installation	Sum	4		
D.2.11.		Supply of all mechanical accessories, including, bolts, nuts and packings as per supplier requirements:				
D.2.11.1		BH 1	Sum	1		
D.2.11.2		BH 4	Sum	1		
D.2.11.3		MISA	Sum	1		
D.2.11.4		BH 16	Sum	1		
TOTAL CARRIED FORWARD						

ITEM NO	PAYMENT	DESCRIPTION	UNIT	QTY	RATE	AMOUNT R
BROUGHT FORWARD						
D.2.12.		Installation of all plant and material supplied under Items 5.2.1 to 5.2.10 including off-loading, storing until erection, handling, erecting of pump, motor, etc. adjusting, painting, operation, factory testing, site testing and handing over in complete working order and upholding for a period of twelve (12) months, including all electrical gear				
D.2.12.1		BH 1	Sum	1		Rate Only
D.2.12.2		BH 4	Sum	1		
D.2.12.3		MISA	Sum	1		
D.2.12.4		BH 16	Sum	1		
D.2.13.		Extension of mechanical pipework	PC sum	1	R 20 000,00	R 20 000,00
D.2.14.		Allow for any additional equipment and/or (Specify):	Sum	4		
D.3.		Supply and install submersible pumps, including steel pipework and associated valves, meters, etc. to be installed according to specifications.	Sum	3		
D.4.		Construction borehole chamber complete with gantry, ventilators, doors, pipe sleeves and other necessary specials according to drawings.	No	4		
D.5.		Connect, testing and commission borehole infrastructure	PC sum	1	R 100 000,00	R 100 000,00
TOTAL CARRIED FORWARD TO SUMMARY						

VICTORIA WEST - UPGRADING OF GROUNDWATER SUPPLY

TENDER NO. UB/VW/23/2022

SUMMARY

SCHEDULE A:	PRELIMINARY AND GENERAL	R	_____
SCHEDULE B:	SITE CLEARANCE	R	_____
SCHEDULE C:	BULKWATER SUPPLY	R	_____
SCHEDULE D:	FENCING	R	_____
SCHEDULE E:	MECHANICAL	R	_____

CALCULATION OF TENDER SUM

TOTAL OF SCHEDULE OF QUANTITIES	R	_____
CONTINGENCIES (10%) The Sum provided here is under the sole control of the Engineer and may be deducted in whole or in part	R	_____
SUBTOTAL	R	_____
VALUE-ADDED TAX (VAT) The tenderer shall add 15% of the subtotal for value-added tax	R	_____
TENDER SUM CARRIED TO FORM OF TENDER	R	_____

SIGNED ON BEHALF OF TENDERER : . . . . . .

VICTORIA WEST– UPGRADING OF GROUNDWATER SUPPLY

TENDER NO. UB/VW/23/2022

PART C3: SCOPE OF WORKS

C3.1 Description of the Works

C3.2 Engineering

C3.3 Project Specifications

C3.4 Construction Management

C3.5 OHS

VICTORIA WEST– UPGRADING OF GROUNDWATER SUPPLY

TENDER NO. UB/VW/23/2022

C3.1: DESCRIPTION OF THE WORKS

EMPLOYER'S OBJECTIVES

The employer's objectives are to upgrade the groundwater supply to the community of Victoria West.

The site is approximately 5 km outside Victoria West and can be reached via N12.

OVERVIEW OF THE WORKS

The contract comprises of the following:

- Supply and install a new bulk pipeline of 4500 m of ND 200 mm uPVC, ND 100 mm Ø uPVC, ND 75 mm Ø uPVC & ND 50 mm HDPe water supply pipework with associated valves.
- Connecting and commissioning of 358 kℓ steel buffer tank with pumps, valves and associated fittings,
- Supply and installation of new borehole infrastructure for 3 boreholes complete with electrical work,
- Supply and installation of borehole chambers and perimeter fencing for 3 boreholes,
- Supply and install booster pump house complete with mechanical & electrical equipment.

Labour-intensive work shall be constructed using local workers who are temporarily employed in terms of this Scope of Work.

EXTENT OF THE WORKS

Work included in this contract involves the following:

a) Establishment of camp and plant on site.

b) Provision of a site office.

c) Site clearance.

d) Accommodation of traffic.

e) Earthworks to shape existing ground levels.

f) Detection and adjustment of existing services.

g) Trench excavation, bedding, blanket fill and backfill of trenches.

h) Construction of water pipework, valve chamber and related works.

i) Commission Steel Buffer Tank Concrete paving surrounding structures.

j) Installation of boreholes and commission of solar panels and batteries, MCC and SCADA

k) Concrete paving surrounding structures.

l) Connection of existing water systems.

a) Cleaning and tidying up of site.

Construction methods must be such that no property or life is endangered. The Employer accepts no responsibility for work that is done outside the site boundaries without the Engineer's approval.

The compilation of the construction programme and any amendments thereto during the course of construction shall be at the cost of the Contractor and shall not be measured elsewhere in this contract.

LOCATION OF WORKS

Victoria West is situated in the area of Ubuntu Municipality, 107 km from Britstown.

The exact location of the site is as follows:

- Latitude (S) 31°23'29"
- Longitude (E) 23°06'48"

Access to the site is via existing surfaced roads.

ABNORMAL RAINFALL

The source for rainfall statistics shall be taken as listed in WB 40 of the Weather Bureau, Department of Environment Affairs, for the determination of Rn and Nn as specified in GCC 5.12.2.2 (see Contract Data (Part 1)).

The Contractor shall keep daily rainfall records and submit them to the Engineer at every site meeting. No additional costs shall be made for the supply and installation of the rain gauge or for the keeping of the rainfall records and all costs must be included in the appropriate items.

Add the following to GCC 5.12.2.2

a) Abnormal climatic conditions

No extension of the time for completion shall be granted on the grounds of normal rainfall conditions, but extension of time in terms of clause 5.12.2.2 of the General Conditions of Contract (2015) on the grounds of abnormal rainfall or wet conditions shall be calculated separately for each calendar month or part thereof, according to the following formula. It shall be calculates as follows for the time of completion, including any extension thereof:

$$V = (Nw - Nn) + \frac{RW - Rn}{X}$$

V = Extention of time for calendar days of the calendar month concerned.
If the Value of V is negative and the absolute value thereof is greater than Nn, V is taken as negative Nn.

Nw = Actual number of days during calendar month on which a rainfall of 10 mm or more is recorded.

Nn = Average number of days in the calendar month concerned on which a rainfall of 10 mm or more is recorded in terms of existing rainfall data.

Rw = Actual rainfall for the calendar month concerned in mm

Rn = Average rainfall for the calendar month in mm deduced from existing rainfall data.

The total extension of time is the algebraic sum of the monthly totals for the period concerned. Extension of time for parts of a month shall be calculated by using pro rata values of Nn and Rn. If the algebraic sum of the monthly totals is negative, no reduction of the time for completion as a result of rainfall shall be applicable.

This formula does not take any delays as a result of flood damage, which may cause further or simultaneous delays, into consideration and flood damage shall be treated separately for purposes of extension of time for completion.

The factor (Nw – Nn) is considered as a fair allowance for deviation from the normal for the number of days on which the rainfall exceeds 10 mm. The factor (Rw – Rn) /X is considered as a fair allowance for deviation from the normal for the number of days on which the rainfall does not exceed 10 mm, but on which wet conditions will hamper or disrupt work.

For the purpose of this Contract the values of Nn, Rn and X shall be the following:

Rainfall Station: Victoria West-TNK

Average Rainfall: 155 mm per year

Average number of days with Rainfall exceeding 10 mm: 4.1 days / year

MONTH	Nn	Rn
January	1.9	47.6
February	1.7	52.1
March	2.0	50.3
April	0.9	26.1
May	0.6	16.4
June	0.3	10.6
July	0.1	6.2
August	0.3	8.2
September	0.3	8.3
October	0.6	17.4
November	0.7	19.6
December	1.1	25.9
TOTAL	**4.1**	**288.7**

X = 20 **Y = 10**

VICTORIA WEST– UPGRADING OF GROUNDWATER SUPPLY

TENDER NO. UB/VW/23/2022

C3.2: ENGINEERING

C3.2.1 DESIGN SERVICES AND ACTIVITY MATRIX

Works designed by, per design stage*:*

Basic engineering and detail to tender stage	Engineers for Employer
Final design approved for construction stage	Engineers for Employer
Temporary works	Contractor (Engineer)
Progress and compliance inspections	Engineers for Employer
Setting out and Construction of works	Contractor
Preparation of “as built” drawing data	Contractor

C3.2.2 DRAWINGS

Typical construction drawings are attached as annexures to this contract document. Additional drawings will, in terms of Clause 5.9 of the General Conditions of Contract (2015), be issued to the Contractor by the Engineer/Employer on the commencement date and from time to time as required.

The drawings listed below are provided in order to give an overview of the project.

Drawing No.	Title
301824-CI-DAL-001	Locality Plan
301824-CI-DRD-014	Project Name Board
301976-CI-DRD-004	Bulk Water Supply Layout
301824- CI- DRD-001-01	Details of borehole pipework and chamber sheet 1 of 4
301824-CI- DRD-001-02	Details of borehole pipework and chamber sheet 2 of 4
301824-CI- DRD-001-03	Details of borehole pipework and chamber sheet 3 of 4
301824-CI- DRD-001-04	Details of borehole pipework and chamber sheet 4 of 4
301824- CI- DRD-002-01	Details of air valve installation and chamber sheet 1 of 2
301824- CI- DRD-002-02	Details of air valve installation and chamber sheet 2 of 2
301824- CI- DRD-003	Details of scour valve installation and chamber
301824- CI- DRD-004	Details of isolation valve installation and chamber
301824- CI- DRD-005	Details of water meter and isolation valve installation and chamber
301824- CI- DRD-006-01	Water meter and control valve installation: chamber and pipework sheet 1of 2
301824- CI- DRD-006-02	Water meter and control valve: chamber and pipework sheet 2 of 2
301824- CI- DRD -008	Typical trench details
301824- CI- DRD -011	Detail of diamond mesh fence and steel gate

C3.3: PROJECT SPECIFICATIONS

C3.3.1: MATTERS RELATING TO THE SANS 1200 STANDARD SPECIFICATIONS

C3.3.1 WORKS SPECIFICATION

C3.3.1.1 Applicable SANS Standards

No applicable.

C3.3.1.2 Applicable national and international standards

a) For the purpose of this Contract the latest issues of the following Standard Specifications for Civil Engineering Construction, applicable at the date of tender advertisement, shall apply -

SANS 1200 A	:	1986	General
SANS 1200 AB	:	1986	Engineer's Office
SANS 1200 C	:	1980	Site Clearance (Amendment 1, 1982)
SANS 1200 D	:	1988	Earthworks (Amendment 1, 1990)
SANS 1200 DB	:	1989	Earthworks (Pipe Trenches)
SANS 1200 DM	:	1981	Earthworks (Roads Subgrade)
SANS 1200 G	:	1982	Concrete (Structural)
SANS 1200 H	:	1990	Structural Steelwork
SANS 1200 HA	:	1990	Steel (Structural)
SANS 1200 HC	:	1988	Steelwork Corrosion
SANS 1200 L	:	1983	Medium-Pressure Pipelines
SANS 1200 LB	:	1983	Bedding (Pipes)
SANS 1200 M	:	1996	Roads (General)

b) The term project specifications appearing in any of the SANS 1200 standardised specifications must be replaced with the terms scope of work.

c) The variations and additions to the specifications listed in C3.3.1.2 are included in this section from pages C3.3-2 to C3.3-44

C3.3.1.2: PROJECT SPECIFICATIONS

SANS 1200 A: GENERAL

A 3 **MATERIALS**

PS A 3.1 **QUALITY**

Substitute the second sentence of the first paragraph of A 3.1 with the following:

Materials shall bear the official mark of the appropriate standard. (SABS Specifications)

Substitute the second paragraph with the following:

The Contractor is responsible for the cost of all testing to ascertain that the materials do comply with the specified minimum requirements of the relative materials and no additional payment will be made for such testing.

The Contractor shall inform the Engineer of any control testing to be done at least **5 working days** before such tests are required and must allow in his program for the time necessary for the tests and the processing of the results thereof.

The handling, storage, transport and erection of equipment, machinery and material shall strictly be in accordance with the requirements of the supplier and or manufacturer. No additional payment will be made for the handling, storage, transport and erection of equipment, machinery and material other than that provided for within the bill of quantities.

All materials shall be new and of the best quality available unless otherwise specified. It must function satisfactorily under prevailing climate and weather conditions at the place of installation.

PS A 3.3 **DELAY DUE TO SUPPLY OF MATERIALS**

Add new sub clause A 3.3:

The Contractor shall ensure that the work is not delayed, due to the lack of materials on the site of the Works, by placing orders with suppliers for the required materials timeously.

A 4 **PLANT**

PS A 4.2 **CONTRACTOR'S OFFICES, STORES AND SERVICE**

Add the following to A.4.2:

Areas occupied by the camp shall be fenced and gates provided. Rubbish shall not be allowed to accumulate and materials and plant and equipment shall be neatly arranged in a workmanlike manner.

The housing of the Contractor's employees on site is not allowed.

The Contractor shall make his own arrangements for housing his employees and transporting them to and from the site. The Contractor is responsible in all respects for the housing and transporting of his employees and for the arrangement thereof, and no extension of time due to any delays resulting from this will be granted.

Except for the necessary security personnel no person shall be allowed on the construction site after normal working hours.

The exact position of the construction camp will be determined by the client.

PS A 4.3 **HAND TOOLS**

Add new sub clause A 4.3:

The Contractor shall provide and maintain all hand tools required for the execution of the Works and all such costs shall be deemed to be included in the tendered rates and no separate payment will be made for it.

PS A 4.4 **MEDICAL FACILITIES AND SAFETY EQUIPMENT**

Add new sub clause A 4.4:

In addition to the requirements stipulated within the Contract, the Contractor shall provide a First Aid cabinet fully equipped and maintained with the minimum contents as listed in the Annexure (Regulation 3) to the General Safety Regulations of the Occupational Health and Safety Act (Act 85 of 1993), to deal with accidents and ailments which are likely to occur during the construction period.

The Contractor shall provide personal safety equipment and facilities as required by Regulation 2 of the General Safety Regulations of the Occupational Health and Safety Act (Act 85 of 1993) and the specific safety requirements of the client as required in terms of the contract.

The Contractor shall designate his Safety Officer and Qualified First Aider. The Contractor shall give copies of the minutes of the site safety meetings to the Engineer.

A 5 **CONSTRUCTION**

A 5.1 **SURVEY**

PS A 5.1.1 **Setting Out of Works**

Substitute the first sentence in A 5.1.1 with the following:

Setting out of the works must be done by a registered land surveyor and provision must be made to stake pegs for excavation and placement of services within excavations. Setting out of the works is the sole responsibility of the Contractor and shall be checked against survey pegs along erf reserve boundaries and from benchmarks being placed by a registered land surveyor. The Contractor shall, within two (2) weeks after all the drawings are in their possession or the site has been handed over to him, ascertain himself of the correctness of all pegs and benchmarks. Any discrepancy shall immediately be reported in writing to the Engineer. Any costs or subsequent costs arising from discrepancies, which had not been reported to the Engineer within the aforementioned period, shall be the sole responsibility of the Contractor.

The Engineer may alter any part of the Works to suit local conditions. The Contractor must therefore contact the Engineer immediately after the preliminary setting out of any part of the Works before starting with detail setting out, or construction. Only after the Engineer has approved a specific site or part of the Works may the detail setting out and construction commence.

PS A 5.2 **WATCHING, BARRICADING, LIGHTING AND TRAFFIC CROSSINGS**

Add the following to A 5.2:

The crossing of main streets must be done in half widths while the total traffic is accommodated on the other lane.

Road traffic signs shall comply with the requirements of the “South African Road Traffic Signs Manual” and shall be approved by the Engineer before construction commences.

PS A 5.4 **PROTECTION OF OVERHEAD AND UNDERGROUND SERVICES**

Add the following to A 5.4:

It can be expected that existing services will be encountered. The Contractor must determine as far as is possible in conjunction with the relevant authorities the location of the various services. Special care must be taken to avoid disrupting these services. The cost of locating and protecting the services shall be deemed to have been included in the rates. The approximate locations of known services are indicated on the drawings. Electricity, Telkom, water and sewerage services can be expected.

The Contractor shall as soon as possible after handing over of the site, commence with the detection of existing services, continue with it without interruption and finalise it at least 7 days before excavation starts at that particular section.

Detected services must be indicated on the As Built drawings.

PS A 5.8 **GROUND AND ACCESS TO WORKS**

Add the following to A 5.8:

The Contractor shall maintain adequate access to all public and private property at all times unless otherwise sanctioned by the Engineer. Details of the proposed methods of providing access shall be submitted to the Engineer for approval before such access is restricted. Any claims arising from impeded accesses shall be wholly the responsibility of the Contractor.

PS A 5.9 **DISRUPTION OF BASIC WATER SUPPLY**

When the water supply to a specific area must be disrupted due to execution of works, the Contractor must give a written notice to the Employer and the involved users at least 48 hours before the water will be shut down. The Contractor must also give a clear indication of the duration of the water supply disruption.

A 7 **TESTING**

PS A 7.4 **STATISTICAL ANALYSIS OF CONTROL TESTS**

Substitute A7.4 with the following:

Test results shall not be evaluated by statistical methods. All results shall comply with the specified minimum requirements of the materials concerned and the tendered rates for the individual items shall include the tests to prove that the item complies with the requirements.

A 8 **MEASUREMENT AND PAYMENT**

A 8.2 **PAYMENT**

PS A 8.2.1 **Fixed charge and value - related items**

The sums tendered for fixed charge and value related items would not be increased should extension of time be allowed for completion of the Contract.

PS A 8.2.2 **Time related items**

The tendered amount for a time related item will be increased if an extension of time for the completion of the works is awarded on the condition that the activity related to the item tendered for must be sustained during the extended period.

The ratio between the increased amount for a time related item and the tendered amount must be the same as the ratio between the extension of the time period for the completion of the works and the original time period allowed for completion of the works.

If the works is completed before the end of the original time period allowed for completion of the works, the tendered amount of a time related item that is influenced by the earlier completion will be reduced similarly.

The payment to the Contractor for time-related items shall be adjusted in accordance with the following formula in the event of the contract being extended.

PS A 8.2.5 **Adjusted Payment for Time-related Items**

The payment to the Contractor for time-related items shall be adjusted in accordance with the following formula in the event of the contract being extended by means of a variation order:

$$\text{Sum of Tendered amounts for time-related items} \times \frac{\text{Extended contract period as authorised by variation order}}{\text{Tendered contract period}}$$

The above-mentioned adjustment of the payment for time-related items shall be made in the Completion Payment Certificate and shall be the only payment for additional time-related costs.

PS A 8.3.6 **Compliance with Environmental Management Programme…….....Unit: Sum**

Add new payment clause A 8.3.6:

The tendered rates shall include full compensation to the Contractor for compliance with all the requirements of the Environmental Management programme.

PS A 8.4 **SCHEDULED TIME-RELATED ITEMS**

PS A 8.4.5 **Other Time-Related Obligations**

Add the following to A 8.4.5:

(01) Material testing required by the Engineer ……..……Unit: Provisional Sum
(Pipe pressure testing ± 2000 m)

(02.) Overheads, charges and profit…… ……Unit: %

A provisional sum has been included in the Bill of Quantities for the pipe pressure tests of approximately 2000 m of installed pipework done by another Contractor that should tested by the appointed Contractor or independent Contractor.

In addition to the above amount, provision is made in the Bill of Quantities for a mark-up on the amount to be paid. The mark-up shall be regarded as full compensation for overheads, charges and profits as provided for in Clause 6.6 of the General Conditions of Contract for Construction Works (Third Edition, 2015)

PS A 8.4.6 **Standing Time Costs**

a) **plant …….. Unit : Sum per working day**

b) **labour ……Unit : Sum per working day**

c) **other resources (to be specified by Contractor) ……. Unit : Sum per working day**

The tendered sum for each item shall include full compensation for all standing time costs of the specified resource of whatever nature and approved by the Engineer, which are not recoverable by way of the provision made in PS A 8.2.5 for the adjusted payment of time-related items.

For the purposes of calculating the total standing time cost, a working week shall be held to consist of five working days and a working day of 8 hours.

Payment for the partial standing of any of the scheduled resources for a day or part thereof, or the standing of a complete resource for a part day, will be made pro rata in proportion to an appropriate factor assessed by the Engineer.

The amount by which the standing time costs is adjusted shall be subject to the contract price adjustment formula as defined in the conditions of contract.

The Contractor shall take note that this payment item shall only apply to delays which, **in the opinion of the Engineer**, are incurred as a result of riot, commotion, politically motivated sabotage and acts of terrorism or disorder outside the Contractor's control. This item shall also apply to standing time incurred as a result of labour boycotts, except that only sub-items (a) and (c), as applicable, will be paid where the Contractor did not pay his labour for the time boycotted. Costs for delays incurred for all other circumstances shall be treated as provided for in the conditions of contract.

The provision of this clause shall in no way prejudice the right of either the Employer or the Contractor to determine the contract in terms of the provisions of clause 9.3, 10.2 and 10.3 of the general conditions of contract.

The Contractor shall take note that no payment will be considered for additional cost or time lost for any daily removal of plant and equipment from the site, any additional costs incurred in protecting his plant and site establishment, or loss incurred in respect of damage to construction plant, equipment and materials supplied and the Works.

In the event that GCC clause 5.13.1 becomes applicable, the time on which such penalties are calculated shall be reduced by the total standing time approved by the Engineer.

PS A 8.5 **SUM STATED PROVISIONALLY BY ENGINEER**

Add new payment clauses:

PS A 8.5.1 **Community Liaison Officer……Unit: Prov sum**

A provisional sum has been included in the Bill of Quantities for a salary to be paid to the Community Liaison Officer.

In addition to the above amount, provision is made in the Bill of Quantities for a mark-up on the amount to be paid. The mark-up shall be regarded as full compensation for overheads, charges and profits as provided for in Clause 6.6 of the General Conditions of Contract for Construction Works (Third Edition, 2015)

PS A 8.5.2 **Charge required by Contractor on sub-item above ……..Unit: %**

A provisional sum has been included in the Bill of Quantities for a salary to be paid to the Community Liaison Officer.

In addition to the above amount, provision is made in the Bill of Quantities for a mark-up on the amount to be paid. The mark-up shall be regarded as full compensation for overheads, charges and profits as provided for in Clause 6.6 of the General Conditions of Contract for Construction Works (Third Edition, 2015)

PS A 8.5.3 **Additional Material Testing by Commercial Laboratories……Unit: Prov sum**

A provisional sum is allowed for additional material testing requested by the Engineer by commercial laboratories. Material testing done by the Contractor should be included in other relevant items.

PS A 8.5.4 **Charge Required by Contractor on Sub Item above ..... Unit: %**

A percentage of the payment made to the additional testing will be paid to the Contractor. The rate shall cover the contractor's overheads, charges and profit on payment for the item.

PS A 8.5.5 **Mechanical and Electrical work to be completed by Sub-contractor…Unit: Prov sum**

A provisional sum is allowed for Mechanical and electrical work to be completed at six (6) existing boreholes (BH016, BH04, MISA, Three (3) new boreholes

PS A 8.5.6 **Charge Required by Contractor on Sub Item above ..... Unit: %**

A percentage of the payment made to the Mechanical and electrical Sub-contractor will be paid to the Contractor. The rate shall cover the contractor's overheads, charges and profit on payment for the item.

PS A 8.5.7 **Electrical work at boreholes to be completed by Sub-contractor…Unit: Prov sum**

A provisional sum is allowed for electrical work to be completed at four (4) existing boreholes (BH016, BH04, MISA), for electrical cabling to be disconnected/connected in order for civil work to be completed.

PS A 8.5.8 **Charge Required by Contractor on Sub Item above ..... Unit: %**

A percentage of the payment made to the electrical Sub-contractor will be paid to the Contractor. The rate shall cover the contractor's overheads, charges and profit on payment for the item.

PS A 8.7 **DAYWORK**

Replace A 8.7 with the following:

Day work will be paid according to the percentage allowance method. For calculating the total remuneration the General Conditions of Contract for Construction Works, second edition (2010) shall apply, with the amendments as in the appropriate special conditions of contract which is bound into this document. A day work schedule will be provided for filling in the necessary information.

PS A 8.8 **TEMPORARY WORKS**

PS A 8.8.2 **Accommodation of Traffic ..... Unit: Sum**

Add the following to A 8.8.2:

The rate shall cover all costs pertaining to the provision, erection, moving, re-erection and maintenance of all temporary barricades, road signs, lights, flagmen, etc. as required, for the guarding and protection of the works, for the construction, gravelling and maintenance of access roads, borrow pits or spoil sites. The rate will also cover the later removal or the cleaning and tidying up thereof, for making the necessary traffic arrangements and arrangements with regard to the moving and/or re-erection of existing traffic signs, as well as all other costs to accommodate the traffic during construction.

PS A 8.8.4 **Existing Services ..... Unit: Sum**

Add the following to A 8.8.4:

Where the Contractor is responsible for the cost of repairs carried out by the Employer or others, the costs will be recovered by means of a deduction from the Contractor's monthly payment certificate. The Employer will attend to the payment of monies due to others, and compilation of a list, all in accordance with the requirements as set out in clause A 5.1.2.

PS A 8.9 COMPLIANCE WITH OHS ACT AND CONSTRUCTION REGULATIONS 2014

PS A 8.9.1 Adhere to Health and Safety Measures …….. Unit: Sum

The rate shall cover all costs pertaining to the provision and maintenance for the duration of the contract of the health and safety measures required in terms of Clause 5 (Principle Contractor and Contractor) of the Construction Regulations (2003) of the Occupational Health and Safety Act as well as specific safety requirements by the client contained within the contract document. No other sum shall be paid in this respect and Tenderers must therefore ensure that adequate provision has been allowed for including allowance for internal audits.

PS A 8.9.2 Compilation and Maintenance Health and Safety Plan ..... Unit: Sum

The rate shall cover all costs pertaining to the provision and maintenance for the duration of the contract of the health and safety plan as required in the Construction Regulations (2003). The rate shall include for all risk assessments required as well as for the development and implementation of safe work procedures and method statements. No other sum shall be paid in this respect and Tenderers must therefore ensure that adequate provision has been allowed for.

PS A 8.9.3 Compilation and Maintenance Health and Safety File ..... Unit: Sum

The rate shall cover all costs pertaining to the provision and/or collection of data (drawings, design, materials, operation and maintenance manuals etc.) to be contained in the file, co-operation with other parties, compilation and maintenance of the file during the duration of the contract and the handing over of the file to the Client on completion of the contract. No other sum shall be paid in this respect and Tenderers must therefore ensure that adequate provision has been allowed for.

PS A 8.10 Overhaul and Additional Transport

Add new payment clause A 8.10:

Notwithstanding any clause in any standardized specification in respect of the definition, no payment will be made for overhaul and all transport shall be regarded as free haul and the costs thereof shall be covered by the relevant tendered rates in the Schedule of Quantities.

AB 3 MATERIALS

PS AB 3.1 NAMEBOARDS

Substitute "South African Institution of Civil Engineers" in the first paragraph of AB 3.1 with "South African Association of Consulting Engineers".

Two name boards, manufactured as specified in AB 3.1 and as shown on tender drawings, shall be provided, and shall be erected, plumb and level, in the position as directed by the Engineer.

PS AB 3.2 OFFICE BUILDINGS

Add the following to AB 3.2:

The contractor shall provide one board room with a table and chairs to accommodate at least 5 persons for the exclusive use of the Engineer and Client. The board room must be well ventilated and must be provided with electrical power and air conditioning.

AB 4 PLANT

PS AB 4.1 TELEPHONE

Substitute AB 4.1 with the following:

The Contractor’s site agent must have a cellular phone available as contact between him and the engineer.

AB 5 CONSTRUCTION

PS AB 5.1 NAMEBOARDS

Add the following to AB 5.1:

The name boards shall be erected within one month after receipt of the letter of acceptance and shall be placed at the position indicated by the Engineer, and kept in good repair for the duration of the contract. Any damage to these boards shall be repaired within fourteen days of a written instruction issued by the Engineer. No payment shall be made in terms of the contract prior to the erection of the name boards.

PS AB 9.1 SITE INSTRUCTION & SITE DIARY BOOKS

The Contractor shall provide the following record books on site for the duration of the contract:

a) A4 size triplicate site instruction book for exclusive use by the Engineer;

b) Site diary book, in triplicate, to be used by the Contractor to record daily activities and contractual decisions taken for the day. The diary must be signed off by the contractor and presented at each site meeting.

PS AB 9.2 QUALITY ASSURANCE AND CONTROL

The Contractor will be required to manage construction activities according to a Quality Control Plan to ensure compliance of construction work and construction material to specifications.

The Engineer will provide the Contractor with example documentation to be used to record quality of material and construction activities associated with the scope of work. The QCP documentation must be signed by both the Contractor or the Contractor’s site agent and the Engineer or the Engineer’s representative. The Engineer will not be represented on site at a fulltime basis and the Contractor must schedule work according to hold points.

SANS 1200 C: SITE CLEARANCE

C 3 MATERIALS

PS C 3.1 DISPOSAL OF MATERIAL

Substitute the first sentence of C 3.1 with the following:

Material obtained from clearing and grubbing and demolition structures shall be disposed of at the dumpsite as arranged with the Municipality by the Contractor.

No payment will be made for overhaul and all transport shall be regarded as freehaul and the costs thereof shall be covered by the relevant tendered rates in the Schedule of Quantities.

C 5 CONSTRUCTION

PS C 5.1 AREAS TO BE CLEARED AND GRUBBED

Substitute the first sentence of C 5.1 with the following:

Unless otherwise indicated by the engineer, clearing and grubbing are limited to the street reserve width only where required and a 2.5m wide strip for trench excavations outside the street reserve.

The Contractor may proceed with clearing and grubbing after the handing over of the site. It is essential that the contractor protect all reference pegs and site boundary pegs before commencing with clearance. Measurement and payment for clearing and grubbing shall only occur for areas as requested in writing by the Engineer.

Substitute the last paragraph with the following:

The Contractor shall schedule his work in such a manner that re-clearing will not be necessary. The cost of re-clearing shall be for the Contractor's account.

PS C 5.2 CUTTING OF TREES

Add the following to C 5.2.3.2:

Trees outside pipeline routes and more than 1m from the outside of the edge beam must be left standing and undamaged, except where otherwise ordered in writing by the Engineer. Authorization and a permit must be obtained from Department of Forestry for the removal of any endangered and / or protected trees (especially Camel thorn trees).

A penalty of R5 000.00 (five thousand rand) per tree for trees damaged and/or removed will be charged.

PS C 5.9 EXISTING FENCING

Existing fencing will only be removed and/or re-erected upon written instruction from the Engineer and paid under the appropriate measured items.

Damage to any other fencing must be repaired immediately at the Contractor's expense.

C 8 **MEASUREMENT AND PAYMENT**

C 8.2 **SCHEDULED ITEMS**

PS C 8.2.1 **Clear and Grub ..... Unit: m2**

Add the following to C 8.2.1:

The removal of all rocks and boulders on site over 0,15 m³ will be paid under subclause D 8.3.2(b).

The removal of hard rock other than boulders will be paid under subclause DB 8.3.2(b).

PS C 8.2.2 **Remove trees and cutting of large branches ..... Unit: No**

Replace C 8.2.2.a to c with the following:

a) The removal of any size tree with a trunk circumference larger than 1m

b) The cutting of tree branches as requested by the engineer

PS C 8.2.8 **Demolish and Remove Structures/Buildings and Dismantle Steelwork, etc…Unit: Sum**

Replace C 8.2.8 with the following:

The rate shall cover the cost of the removal of all structures on the site, channel- and/or sewer mainline routes, the disposal thereof at the dumping site, the levelling and shaping of the site and the backfilling of any holes with material of at least the same quality as that of the in situ material. The rate shall also cover the cost of removing cleaning and handing over of all usable material to the Employer.

Payment for the removal of individual structures will be made pro rata in the relation of the area thereof to the total area of structures that has to be demolished and removed.

PS C 8.2.11 **Remove and re-erect existing fences ..... Unit: m**

Add new payment clause C 8.2.11:

The rate shall cover the cost of removal and stacking of fencing material, including all gates, as well as the re-erection thereof with the existing material. No payment will be made for the replacement of fencing material that has been damaged by the Contractor and all costs for this are deemed to be covered by the rate for the appropriate items.

Material that is unsuitable for re-erection must be viewed by the Engineer before it is removed. Only by written approval from the Engineer can the Contractor claim advance compensation for such material.

PS C 8.2.12 **Site demarcation along pipeline route ..... Unit: m**

The rate shall cover all the cost for material, labour and plant required to demarcate the pipeline route. Wooden standards must be supplied at 20m centres, with three wooden droppers between the standards. A minimum of three (3) plain wire strands should be tensioned horizontally, the lowest strand being at a height of 500mm above ground level and the highest being at 1,2m. The Contractor shall maintain all demarcation for the duration of the construction activities. No payment will be made for the replacement of fencing material that has been damaged by the Contractor and all costs for this are deemed to be covered by this rate. The Contractor will remove all demarcation (fencing) from site at the end of the contract.

SANS 1200 D: EARTHWORKS

D 2 **INTERPRETATIONS**

PS D 2.3 **DEFINITIONS**

Add the following to D 2.3:

Sand (cohesionless and non-cohesive)

For the purposes of the compaction requirements, a non-plastic material of which not less than 95 % by mass passes a sieve of nominal aperture size 4,75 mm, and not more than 10 % passes a sieve of nominal aperture size 0,075 mm.

D 3 **MATERIALS**

D 3.1 **CLASSIFICATION OF CUTTINGS**

PS D 3.1.2 **Cutting classes**

Add the following to D 3.1.2

Soft and intermediate cuttings will be measured under this contract as “soft”. Hard rock and boulder excavations will be measured as “hard”.

D 3.3 **SELECTION**

PS D 3.3.1 **General**

Substitute the second paragraph of D 3.3.1 with the following:

The Contractor shall deal selectively with material from general excavation. Any imported material in road reserves that do not comply with the minimum requirements for the respective layers, shall be removed and replaced with suitable material, all at the Contractor's expense.

The Contractor shall deal in such a way with materials from all excavations for streets, channels or pipe trenches to ensure that usable material is not contaminated with unsuitable material. If usable material is contaminated, such contaminated material shall be removed and replaced with suitable material, all at the Contractor's expense. No additional payment shall be made in respect of this and all relevant costs shall be deemed to be included in the tendered rates.

All unsuitable material shall be removed prior to importing fill material to such areas.

D 5 **CONSTRUCTION**

D 5.1 **PRECAUTIONS**

PS D 5.1.2 **Existing Services**

PS D 5.1.2.2 **Detection, location and exposure**

Add the following to D 5.1.2.2:

If existing services are not shown on the drawings but the existence thereof can be reasonably expected, the Contractor shall, in conjunction with all relevant authorities, determine the exact depth and location of such services before the commencement of construction. After locating the exact position of services, whether indicated on the drawings or not, such services shall be deemed to be known services and the Contractor shall be liable for all costs and subsequent

costs arising from the damage thereof as a result of the Contractor's activities. These services must also be indicated on the "As Built" drawings. Postal and Telecommunication Services have to be contacted in advance to clarify all relevant cable positions before any excavations can commence.

All services must be located and opened for inspection by the Engineer before commencing trench excavation. Any costs or losses suffered by the Contractor as a result of not abiding by this specification will be for the Contractor's account.

PS D 5.1.2.3 **Protection of Cables**

Substitute "estimated position" in the second sentence of D 5.1.2.3 with "actual or exposed position".

PS D 5.1.4 **Nuisance**

PS D 5.1.4.1 **Dust nuisance**

Add the following to D 5.1.4.1:

The Contractor is responsible for dust control and is liable for all claims that may result from dust nuisance on all parts of the site and at all times from the date of handing over of the site to the completion date of the contract. No payment regarding the above-mentioned will be made and all costs shall be deemed to be covered by the tendered rates.

PS D 5.1.6 **Road Traffic Control**

Add the following to D 5.1.6:

a) Sufficient road signs must be erected in such a way that motorists will be warned in time of works, eg. at the closing of a street sufficient signs to direct traffic must be erected at the preceding intersection.

b) Bypasses and/or road signs shall be provided and/or erected at all locations where the free flow of traffic is obstructed and shall be approved by the Engineer before the commencement of construction. Where main roads are crossed, detours and temporary traffic signs must be provided as shown on the attached drawings.

c) Where a trench crosses a street or any place where a trench crosses the direction of traffic flow, drums must be placed in the street and not just along the sides of the street with danger tape in between.

d) Danger tape must be put up between drums and tied around the drums.

e) Drums may not be filled with stones. The spacing of drums must be in such a way (maximum 5 m) that they are visible from all directions.

f) Sufficient safety measures must be utilised for pedestrians.

g) Road traffic signs shall comply with the requirements of the “South African Road Traffic Signs Manual” and shall be approved by the Engineer before construction commences.

No additional payment for compliance with the abovementioned conditions will be made and all costs (labour, road traffic signs, etc.) shall be included under PS A 8.8.2.

D 5.2 METHODS AND PROCEDURES

D 5.2.1 Site Preparation

PS D 5.2.1.2 Conservation of topsoil

Add the following to D 5.2.1.2:

Removal of topsoil shall only occur in areas as approved, in writing, by the Engineer. The topsoil shall be conserved for use elsewhere.

D 5.2.2 Excavation

PS D 5.2.2.3 Disposal

Substitute the second sentence of D 5.2.2.3 with the following:

All surplus and unsuitable material shall be dumped and neatly finished off at a commercial dump site of the Contractors choice. No payment will be made for overhaul and all transport shall be regarded as free haul and the costs thereof shall be included in the tendered rate.

PS D 5.2.2.4 Excavation by hand around existing services

Add new sub clause D 5.2.2.4:

Where hand excavation is required around existing services it shall be done within 3,0 m above and on both sides of cables and within 300 mm above and on both sides of pipes, as well as underneath the services.

PS D 5.2.2.5 Utilisation of excavated material

Excavated material and material recovered from temporary work shall, in so far as it is suitable, be utilised for backfill. Material unsuitable for use as backfill or in excess of the quantity required to complete the backfill shall be spoiled and neatly finished off at a commercial dump site of the Contractors choice. No payment will be made for overhaul and all transport shall be regarded as free haul and the costs thereof shall be included in the tendered rate.

PS D 5.2.3 Fill and compaction

PS D 5.2.3.1 Embankments

Add the following to D 5.2.3.1:

Embankments and terraces shall be constructed of approved material from excavations and shall be compacted to 95 % of MAASHTO density, in layers not exceeding 150 mm in depth.

PS D 5.2.3.2 Back filling of trenches and back filling against structures

Add the following to D 5.2.3.2:

Back filling around structures shall be compacted to 95 % (100 % for sand) of MAASHTO density.

When specified or ordered by the Engineer the back filling against structures shall be done using a mixture of soil cement. The mixture shall contain 12 % cement and just sufficient water for it to be placed and compacted like ordinary back filling material.

D 5.2.4 **Finishing**

PS D 5.2.4.1 **Final grading**

Add the following to D 5.2.4.1:

Embankments shall be trimmed to an even grade of 1 in 2, and all other terraces to an even grade on 1 in 1,5 unless shown otherwise on construction drawings.

PS D 5.2.4.2 **Topsoiling**

Add the following to D 5.2.4.2:

Topsoil shall be placed on the sides and on the tops of embankments and other terraces where no paving is specified, or in areas where directed by the Engineer. All conserved topsoil must be spread evenly over disturbed areas.

D 5.2.5 **TRANSPORT FOR EARTHWORKS**

PS D 5.2.5.1 **Freehaul**

Substitute D 5.2.5.1 with the following:

Notwithstanding any clause in any standardized specification in respect of the definition, no payment will be made for overhaul and all transport shall be regarded as freehaul and the costs thereof shall be covered by the relevant tendered rates in the Schedule of Quantities.

PS D 5.2.5.2 **Overhaul**

Substitute D 5.2.5.2 with the following:

Notwithstanding any clause in any standardized specification in respect of the definition, no payment will be made for overhaul and all transport shall be regarded as freehaul and the costs thereof shall be covered by the relevant tendered rates in the Schedule of Quantities.

D 8 **MEASUREMENTS AND PAYMENT**

D 8.3 **SCHEDULED ITEMS**

PS D 8.3.8 **Existing Services**

PS D 8.3.8.1 **Location**

PS D 8.3.8.1(c) **Excavate by hand in soft material to expose services ..... Unit: m^3**

Add the following to D 8.3.8.1(c):

Excavation by hand to expose existing services shall only be measured and paid for if so ordered in writing by the Engineer. After the excavation of trial holes to determine the exact position and depth of existing services, at intervals as required by the Engineer, the excavation to a level of 300 mm above such services shall be measured and paid for as normal excavation, independent of the depth of such excavation. Only excavation within 300 mm of the existing services will be measured and paid for as excavation by hand and then only if ordered in writing by the Engineer.

If such services are damaged or removed, it has to be repaired or replaced immediately to its original position and condition, which is acceptable for the Engineer.

DB 3 MATERIALS

PS DB 3.1 CLASSES OF EXCAVATION

Substitute DB 3.1 with the following:

The excavation of materials shall be classified as follows:

a) Soft excavation shall be all excavations which are not classified as hard rock in (b) underneath.

b) Hard rock is solid rock present in mass, banks or bands for which the use of explosives would be the normal practical method of excavation or boulders over 0,52 m^3 in volume.

If the Contractor chooses to drill through material other than rock to underlying rock before excavating the trench, then the volume of rock, as defined above, will be measured after the excavations have been completed.

No intermediate material will be paid under this contract. Only soft or hard material will be paid.

PS DB 3.5 BACKFILL MATERIALS

a) Substitute "from trenches" in DB 3.5(a) with "from trenches, channels or other excavations".

Add the following to DB 3.5(b):

c) All pipe trenches in street reserves shall be classified as areas subject to loads from road traffic.

d) All pipe trenches underlying or adjacent to the carriageway shall be backfilled with sand complying with the requirements for A3 materials.

DB 3.6 MATERIALS FOR REINSTATEMENT OF ROADS AND PAVED AREAS

PS DB 3.6.1 Sub-base and Base

Substitute DB 3.6.1 with the following:

Where trenches cross or run adjacent to surfaced roads and paved areas of which the surfaces are scheduled to be reinstated, the material excavated from the existing base and/or* sub-base pavement layer(s) shall be set aside and used in the reconstruction of the sub-base layer. Where applicable, new material complying with the requirements of SABS 1200 MF shall be used in the re-construction of the base layer. Any shortfall in material for the reconstruction of the sub-base layer shall be made up by the use of material complying with the requirements of SABS 1200 ME.

PS DB 3.7 **SELECTION OF MATERIAL FOR REPAIR WORK**

Add the following to DB 3.7:

If the excavation of a pipeline damages an existing road surface, the Contractor must stockpile material from the top 200 mm of such a road surface in order to re-use it as sub-base for the repairing of the road crossing.

If necessary gravel material that is suitable for the reparation of road surfaces must be imported.

The Contractor must make provision in his tariffs for compaction in road reserves and for the selection of excavated material as specified above.

DB 4 **PLANT**

PS DB 4.1 **EXCAVATION EQUIPMENT**

Add the following to DB 4.1:

An adequate number of suitable tools, including hand stampers, wheelbarrows and hose pipes shall be provided by the Contractor. The Contractor will supply mechanical compaction equipment and when required pneumatic and rock breaking equipment.

All excavations exceeding the specified widths shall be back filled with approved selected material. No payment shall be made for this and all relevant costs shall be deemed to be included in the tendered rates.

PS DB 4.4 **DEWATERING EQUIPMENT**

One set of dewatering equipment shall consist of pumps, pipes, well points and other equipment necessary for dewatering excavations up to 7 m depth and a trench length of 45 m for either sides or 70 m on one side.

DB 5 **CONSTRUCTION**

DB 5.1 **PRECAUTIONS**

PS DB 5.1.1 **Water in trenches**

Water in pipe trenches may cause movement of the pipe due to flotation and backfilling must be completed as soon as possible. If there was any movement, the contractor must remove and relay the pipes at his own cost and to the satisfaction of the Engineer.

PS DB 5.1.2 **Stormwater, Seepage and Dewatering of Excavations**

The costs of dealing with water shall be deemed to be included in the tendered rates for excavation and no additional payment shall be made in this respect.

PS DB 5.1.3 **Provision for traffic and access to properties**

Add the following to DB 5.1.3

Construction must be done in half widths back filled completely and the surface reinstated before the next half is done in order to accommodate the traffic flow at all times.

PS DB 5.1.4 **Existing services alongside or crossing excavations.**

Add the following to DB 5.1.4

The conditions of PSA 5.4 shall apply mutatis mutandis.

PS DB 5.2 **MINIMUM BASE WIDTHS SPECIFIED**

Substitute paragraph (b) of DB 5.2 with the following:

The minimum base width for all pipes shall be 600 mm plus the outside diameter of the pipes, irrespective of the depth at which they are laid.

PS DB 5.4 **EXCAVATION**

Add the following to DB 5.4:

Excavation and backfilling of pipe trenches on sidewalks in the residential area shall be done in such a way as to ensure the least possible disruption to the public and entrances to properties. No additional payment shall be made for this and all relevant costs shall be deemed to be included in the tendered rates. Electric cable trenches shall be dug in lengths as requested by the Electrical Contractor.

The provisions of PS D 5.2.2.4 shall apply mutatis mutandis for hand excavation.

PS DB 5.5 **TRENCH BOTTOM**

Substitute "90 %" in the second paragraph of DB 5.5 with "93 % (100 % for sand)".

PS DB 5.5.1 **Over-Excavation of Trenches**

Add new subclause DB 5.5.1:

Where pipe trenches are excavated wider and deeper than specified or shown on the drawings, these excavations must be backfilled with suitable approved selected material in layers of not more than 150 mm un-compacted thickness and must be compacted to the thickness of the adjoining in-situ material or as prescribed by the Engineer.

Where the Engineer views these backfilling methods as not sufficient he may require that the over excavation or part thereof be filled with mass concrete of a prescribed grade. All backfilling as a result of over-excavation will be at the own cost of the Contractor.

DB 5.6 **BACKFILLING**

PS DB 5.6.1 **General**

Add the following to DB 5.6.1:

Backfilling in road reserves must be compacted in 100 mm layers up to natural ground level.

Where prescribed by the Engineer all surplus material must be neatly piled over the real trench width to a height not more than 150 mm higher than the adjoining level.

PS DB 5.6.2 **Material for Backfilling**

Substitute "from trench excavations" in the first paragraph of DB 5.6.2 with "from trench, channel or street excavations".

PS DB 5.6.3 **Disposal of Soft Excavation Material**

Add the following to DB 5.6.3:

All surplus and unsuitable material as described in DB 5.6.3 shall be disposed of at the spoil site, (as described in PS D 5.2.2.3) and levelled. No payment will be made for overhaul and all transport shall be regarded as freehaul and the costs thereof shall be included in the tendered rate.

DB 5.7 **COMPACTION**

PS DB 5.7.2 **Areas Subject To Traffic Loads**

Add the following to DB 5.7.2:

All pipe trenches within street reserves, road crossings, accesses to services, farms and camps that fall within the road reserve, will be regarded as areas subject to traffic loads.

Backfilling of trenches that are subject to traffic loads will be executed in layers of 100 mm as follows:

Main backfill up to road layers:	93% Mod AASHTO
Selected backfill material:	93% Mod AASHTO (final thickness of layer — 200 mm)
Sub-base:	95% Mod AASHTO (final thickness of layer — 200 mm)
Base:	98% Mod AASHTO (final thickness of layer — 175 mm)

Sand backfilling shall be compacted to 100% of MOD ASSHTO density.

DB 5.9 **REINSTATEMENT OF SURFACE**

PS DB 5.9.2 **Private Property and Commonage**

Add the following to DB 5.9.2:

Brick and concrete pavement, gardens and lawns shall be repaired to the original standard where they were crossed. Grass and plants shall be taken out of the ground, temporarily stocked, watered during construction and replanted after backfilling.

Brick paving will be carefully taken out by hand and stored. All the brick paving will then be done with the original bricks.

PS DB 5.9.4 **Bitumen Roads: Sub-base And Base**

Add the following to DB 5.9.4:

Any additional imported material required for the reinstatement of selected layers, sub base or base shall comply with the requirements of the relevant standardised and/or project specifications.

PS DB 5.9.5.1 **Bitumen Roads: Surfacing**

Add the following to DB 5.9.5.1:

The re-sealing shall be executed with a 19mm Aggregate and two layers of slurry (19mm Cape seal) for all streets except if specified otherwise.

DB 7 **TESTING**

Add new subclause DB 7.2:

Density test results must be submitted for every section on which tests have been performed. A minimum of two tests per section is required but not less than one per 50 metre. Test results must be submitted for every layer (maximum layer thickness – 300 mm) and approval by the Engineer is necessary prior to construction of the following layer. Density testing methods that should be employed should be by means of sand displacement.

DB 8 **MEASUREMENT AND PAYMENT**

PS DB 8.1 **BASIC PRINCIPLES**

Delete "along the route of the pipeline" in DB 8.1.1.

DB 8.2 **COMPUTATION OF QUANTITIES**

PS DB 8.2.4 **Shoring**

Add the following to DB 8.2.4:

Shoring will be measured under items PS DB 8.3.2(a1) and PS DB 8.3.2(a2).

DB 8.3 **SCHEDULED ITEMS**

PS DB 8.3.2 **Excavation**

PS DB 8.3.2 **a) Excavate in all materials for trenches, backfill, compact and dispose of surplus material ..... Unit : m**

..... Add the following to D 8.3.2(a):

The depth of excavation in street reserves shall be measured from the final finished level.

In cases where services lay parallel to steep slopes, the depth of the excavation will be measured along the centre of the trench (on the route of the service).

The rate shall also provide for the fact that the excavation width in sand and hard rock material will be wider than normal and that fast excavation and backfill will reduce ground water seepage.

This rate shall include full compensation for the provision of all labour, plant and equipment for shoring measures.

No payment will be made for overhaul and all transport shall be regarded as freehaul and the costs thereof shall be included in the tendered rate

i) **Electric cable trenches**

Excavation for electric cables not laid with other services will be measured and paid for separately under the relevant depth increments. The rate shall provide for excavation, preparing trench lengths as requested by the electrical subcontractor, backfilling and compaction thereof.

The rate shall also make provision for the possibility that long trenches need to be prepared for the electrical Contractor to lay full cable lengths (up to 300 m) and immediate backfilling after the installation of the cable (same day) to prevent theft.

PS DB 8.3.2 b) Extra-over items (a1) and (a2) for:

Add the following to DB 8.3.2(b)

Hard rock and boulder excavation type A and B will be measured under one extra-over tariff and the Contractor must provide for this in his tariff for hard rock excavation. Boulders types A and B will only be measured as hard rock excavations when the material cannot be removed using machinery as listed in DB 3.1(b) otherwise it will be measured as soft excavation.

The disposal of the surplus material will not be measured separately, but will be included in the tendered rate. Payment for this item will only be done, once the finishing of the trenches is to the Engineers satisfaction.

No payment will be made for overhaul and all transport shall be regarded as freehaul and the costs thereof shall be included in the tendered rate.

PS DB 8.3.2 Hand excavation in all materials for trenches, backfill, compact and dispose of surplus material (including shoring) Unit : m

The rate shall include full compensation for the provision of all labour, plant and equipment to complete hand excavation and backfilling where ordered by the Engineer, as if in soft material, as well as for backfilling and the disposal of surplus material. The backfilling must be compacted in layers not exceeding 150 mm from 300 mm above the top of the barrel of the pipe up to ground level to 93% Mod AASHTO.

This rate shall include full compensation for the provision of all labour, plant and equipment for shoring measures.

No payment will be made for overhaul and all transport shall be regarded as freehaul and the costs thereof shall be included in the tendered rate.

PS DB 8.3.2 **b) Extra-over items (a1) and (a2) for:**

Add the following to DB 8.3.2(b)

Hard rock and boulder excavation type A and B will be measured under one extra-over tariff and the Contractor must provide for this in his tariff for hard rock excavation. Boulders types A and B will only be measured as hard rock excavations when the material cannot be removed using machinery as listed in DB 3.1(b) otherwise it will be measured as soft excavation.

The disposal of the surplus material will not be measured separately, but will be included in the tendered rate. Payment for this item will only be done, once the finishing of the trenches is to the Engineers satisfaction.

No payment will be made for overhaul and all transport shall be regarded as freehaul and the costs thereof shall be included in the tendered rate.

PS DB 8.3.2 **e) Extra-over PS DB 8.3.2(a) for temporary stockpiling of material ..... Unit : m^3**

Temporary stockpiling of material will only be measured and paid for if ordered so in writing by the Engineer and if it is not contaminated with unsuitable material.

The rate shall provide for the handling and stockpiling of the material within the free haul distance.

DB 8.3.3 **Excavation Ancillaries**

PS DB 8.3.3.1 **Make up deficiency in backfill material (provisional)**

Add the following to DB 8.3.3.1:

d) Stockpile ..... Unit : m^3

a) From other necessary excavations on site .....Unit: m³

The rate shall include stockpile and handling of material within construction site area. The price shall be all inclusive of plant and labour required to process material. No payment will be made for the transport of material and all transport shall be regarded as freehaul and the costs thereof shall be included in the tendered rate.

c) By importation from commercial / off-site sources selected by Contractor ...Unit: m³

Add the following to the last paragraph of DB 8.3.3.1:

No payment will be made for the transport of material from commercial sources or sources outside the site that the Contractor has selected and all transport shall be regarded as freehaul and the costs thereof shall be included in the tendered rate.

PS DB 8.3.3.3 **Compaction in road reserves ..... Unit: m³**

Add the following to DB 8.3.3.3:

This item is only applicable to the backfill above the bedding and fill blanket and require 95% Mod AASHTO compaction of material as supposed to 93% Mod AASHTO elsewhere.

PS DB 8.3.4 **Particular Items**

Add the following to DB 8.3.4:

b) Control of groundwater ……..……. Unit: m

The tendered rate for the effective control of ground water shall cover for all equipment, plant, material as well as the labour involved to use the well points, pumps and pipes, etc. to control the groundwater before and during excavation. The rate shall also cover the maintenance of the equipment for the total contract period. Payment for this item will only be made if the Contractor used well points and pumps to control ground water before or during excavation and measurement will be done on the length of pipe laid in trenches where ground water control had been applied.

DB 8.3.5 **Existing Services That Intersect or Adjoin A Pipe Trench**

PS DB 8.3.5 **a) Services that intersect a trench ..... Unit: No**

Add the following to DB 8.3.5(a):

Existing services with a depth of cover exceeding 300 mm, measured from the bottom of excavation to the top of the existing service shall not be measured and paid for. There will be distinguished between existing trunk services and existing erf connection.

The rate shall also allow for the following costs:

i) Sufficient photo's have to be taken of existing services and handed over to the Engineer before they are being crossed, if there is a possibility of a difference in opinion over the condition of those services, especially on private property.

ii) If such a service is damaged, it has to be repaired to its original condition or if possible, to a standard agreed to in writing with the relevant owner. This agreement has to be approved by the Engineer.

iii) If such a service is removed, it has to be replaced as per original.

PS DB 8.3.5 **b) Services that adjoin a trench ..... Unit: No or m**

Add the following to DB 8.3.5 (b):

The unit "number" will only be used for services such as poles and trees.

The cost for shoring shall be deemed as covered by the listed items and no additional payment will be made for this.

No payment will be made for overhead services that do not rest directly on the ground except where allowance is made for this in the schedule of quantities.

Existing services that rest directly on the ground e.g. poles, trees, walls and structures are handled in the same way as underground services, but the axis of the service will be determined as follows:

The vertical axis is defined as the nearest side or corner of the existing structure to the excavation, measured at the point where the structure and natural ground level intersect.

The horizontal axis will be at the point where the structure and the natural ground level intersect. In this instance, where the excavation falls above the 45° line but within 1,0 meter horizontally from the structure, the service will also be measured as adjoining.

If the structure, according to the above-mentioned, does not qualify as an adjoining service but the foundation of the structure is such that if a 45° line drawn from the nearest bottom corner thereof cuts through the excavation, the structure will be measured as an adjoining service **if approved by the Engineer**.

If there is more than one service adjoining the same trench and such a service is on the same side of the trench, payment will only be made for the nearest service to the trench, or if they are the same distance from the trench for the top one. The maximum number of services that will be paid for, is therefore one on each side.

There will be distinguished between existing trunk services and existing erf connection.

DB 8.3.6 **Finishing**

PS DB 8.3.6.1 **Reinstate Road surfaces complete with all courses..... Unit: m²**

Replace DB 8.3.6.1 with the following:

1) **Gravel……..... . Unit: m²**
2) **Asphalt of thickness 40 mm (Surfaced Road) ..... Unit: m²**
3) **Concrete slab (Class 25 MPa or higher ……..... Unit: m³**
4) **Sidewalk paving bricks (60 mm with layerworks) ..... Unit: m²**
5) **Kerbing……..... Unit: m**

The rate shall cover the cost of temporary accommodation of traffic (including the signs and bypasses), selective excavation (including the equipment that is required to break up, remove and, if necessary, stockpile the original surface material), and subsequently of reinstating and compaction and shall include the cost of delays and the cost of any risk of having to repair damage as specified in DB 5.10. Compaction must be according to PS DB 5.7.2.

PS DB 8.3.6.2 **Extra Over DB 8.3.6.1 for imported material .....Unit: m³**

Add new payment clause DB 8.3.6.2:

The quantity will be calculated according to the actual volume of material placed in the final position according to the specified dimension.

The rate is an “extra-over” PS DB 8.3.6.1 and includes all costs of supplying and placing of imported material in the final position with material from commercial sources.

DM 3 **MATERIALS**

PS DM 3.1 **CLASSIFICATION FOR EXCAVATION PURPOSES**

Add the following to DM 3.1:

All in situ pavement material other than hard rock or boulder excavation shall be classified as soft material for excavation purposes.

DM 3.2 **CLASSIFICATION FOR PLACING PURPOSES**

PS DM 3.2.3 **Selected Layers**

Substitute DM 3.2.3 with the following:

Materials used for selected layers shall comply with the following:

DESCRIPTION	LOWER SELECTED LAYER (G8 – TRH 14)	UPPER SELECTED LAYER (G6 – TRH 14)
Minimum CBR at 93% / 95% MAASHTO density	10	25
Maximum CBR swell at 100% MAASHTO density	1,5%	1,0%
Maximum size of aggregate after compaction	80 mm	63 mm
Minimum Grading Modules (GM)	0,5	0,75
Maximum Plasticity Index (PI)	12 (3xGM+10)	12 GM
Maximum Group Index	-	1

All imported material underlying the sub-base or base of the final road prism, whichever may be applicable, that does not comply with the requirements for lower selected layer or upper selected layer in the respective depth categories, shall be removed and replaced with material complying with the requirements of selected layers, all at the Contractor's expense.

DM 4 **PLANT**

PS DM 4.2 **PLANT FOR TREATMENT BELOW SELECTED LAYER**

PS DM 4.2.1 **Pneumatic-tyre Roller**

A pneumatic-tyre roller is compulsory for compaction purposes. Pneumatic-tyre rollers shall be of the self-propelled type that is equipped with smooth pneumatic-tyre wheels of the same diameter. The mass of the roller shall be at least 10 tons. Wheels must bear the same mass.

The rollers must be equipped with devices that will be able to keep the wheels wet and clean during operation.

The wheels of the roller shall be arranged in such a way that one pass with the roller will cover the whole width of the machine. The roller must be able to take a tyre pressure of 600 kPa and the minimum allowed working tyre pressure should be 450 kPa. The maximum difference in pressure between any two wheels shall not be greater than 35 kPa.

DM 5 **CONSTRUCTION**

DM 5.1 **PRECAUTIONS**

PS DM 5.1.2 **Accommodation of Traffic**

Add the following to DM 5.1.2:

Bypasses shall be constructed and road signs erected where the free flow of public traffic is restricted. Such bypasses and road signs shall be in accordance with the "CSRA-CUTA : Road Traffic Signs Sub-committee; Road Signs Note no 13, the SA Road Traffic Signs Manual" and shall be approved by the Engineer before the commencement of construction.

DM 5.2 **METHODS AND PROCEDURES**

DM 5.2.2 **Cut and Borrow**

PS DM 5.2.2.2 **Dimensions of cuts**

Substitute "sub-base" in the second paragraph of DM 5.2.2.2 with "sub-base or selected layer, whichever may be applicable", and

Substitute "CBR of at least 7" with "CBR as applicable according to the provisions of PS DM 3.2.3".

PS DM 5.2.2.3 **b) Cut to spoil.**

Substitute DM 5.2.2.3(b) with the following:

All surplus and/or unsuitable material shall be removed from the site and disposed of at the spoil site (as described in PS D 5.2.2.3) and shall be shaped to establish a free draining surface.

PS DM 5.2.2.4 **Temporary stockpiling of materials**

Add the following to DM 5.2.2.4:

The Contractor shall program the works in such a manner that suitable excavated material shall, if practically possible, be placed directly in the appropriate position to ensure that temporary stockpiling is limited to an absolute minimum. No payment shall be made for the temporary stockpiling of material where such material is to be used for backfilling of pipe trenches, except when so ordered in writing by the Engineer.

PS DM 5.2.3.3 **Treatment of roadbed**

a) Preparation and compaction of roadbed.

Substitute the first paragraph of DM 5.2.3.3(a) with the following:

The road-bed (at least class G8 for use as lower selected) shall be scarified to a depth of 75mm. Import 75mm coarse material from borrow pit, spread, mix with the 67.5mm in-situ material, water, shape and compact to 93% MAASHTO density except where otherwise ordered by the Engineer.

Measurement and payment shall be made under item PS DM 8.3.3(b).

Add the following sub-clause:

(c) In situ preparation of roadbed with eight roller passes.

Any part of the roadbed that lies within the selected layer and which, regardless of its density, is suitable according to the Engineers opinion can be used in situ if so instructed by the Engineer.

If due to the nature of material, the degree of compaction cannot be controlled by means of in situ density tests, the Engineer may instruct compaction to be done by eight roller passes as specified in PS DM 4.2. The Engineer may further request that the compaction effort be altered by increasing or reducing the number of passes and that payment be amended accordingly.

The surface of the roadbed shall be shaped true in respect of line and level within the tolerances as specified in clause 6. During the shaping of the road bed, all material that has to be removed and cannot be re-used, shall be disposed of and will be paid for under item PS DM 8.3.7. If necessary, additional material that has been approved by the Engineer shall be imported to meet the required levels.

The engineer will apply no strict measurements about soil moisture content during compaction. The Contractor must however convince the Engineer that all possible efforts have been made to use favourable soil moisture conditions. Compaction must be done during periods when the roadbed is not to wet or to dry. The Engineer has full authority to decide whenever conditions are favourable for compaction and may at any stage instruct the Contractor to water the road-bed at the Contractors expense if he, in the Engineer's opinion, neglected to satisfy the above-mentioned requirements.

PS DM 5.2.5 **Selected Layer**

Add the following to DM 5.2.5:

The Engineer may, depending on the quality of the in situ material, order the omission of one or both of the selected layers. To determine the number of selected layers, if any, the Engineer may order the Contractor to dig test holes with maximum dimensions of 1,5 m x 1,5 m and 1,0 m deep at positions indicated by the Engineer, before construction commences.

The Contractor shall backfill all test holes with selected material and compact it to 95% of MAASHTO density, after the Engineer has taken samples and profiled the holes.

PS DM 5.2.7 **Stabilization**

The sub-base course shall be stabilized to C4 standards and the initial cement demand to comply with the specifications shall be included in the rates for stabilization of the layer. UCS and ITS strength tests for each stabilized section shall be included in the tendered rate and these tests have to be performed within the prescribed period for lime or cement.

PS DM 5.2.9 **Shaping and Compacting Below Selected Layer**

Each portion of the road-bed below the selected layer which, by virtue of its inadequate natural density, is directed by the Engineer to be compacted by means of a pneumatic-tyred roller, shall be prepared by shaping where necessary, and each such portion shall be compacted by means of at least eight complete passes by a pneumatic-tyred roller. One pass shall consist of the complete area being systematically passed in the longitudinal direction so that each pass overlaps the previous by half.

DM 6 **TOLERANCES**

PS DM 6.5 **DIMENSIONS AND LEVEL CONTROL**

The Contractor shall submit to the Engineer, in a form acceptable to the Engineer, records of dimension and level control, before requesting the Engineer to carry out any routine inspections.

DM 7 **TESTING**

PS DM 7.2 **PROCESS CONTROL**

Amend table 1 of DM 7.2 as follows:

Substitute "2 000 m^2" with "1 500 m^2", "1 500 m^2" with "1 200 m^2 and "5 000 m^2" with "3 000 m^2".

DM 7.3 **ROUTINE INSPECTION AND TESTING**

Substitute DM 7.3.2 with the following:

No density shall be less than the specified minimum density for the relevant layer.

The cost of all routine testing done by the Engineer, and of which the results do not comply with the specified minimum requirement for the material, shall be borne by the Contractor and will be subtracted from the monthly payment certificates.

DM 8 **MEASUREMENT AND PAYMENT**

DM 8.3 **SCHEDULED ITEMS**

PS DM 8.3.3 **Preparation of Road Bed**

Substitute DM 8.3.3(b with the following:

c) The in-situ sand must be modified mechanically by mixing the top 75mm with 75mm imported coarse material. This layer will serve as the selected layer and has to be compacted to 93% MAASHTO density.

PS DM 8.3.5 **Selected Layer Compacted To 95 % Of MAASHTO Density ..... Unit : m^3**

Substitute "93 % of MAASHTO density" in the heading of DM 8.3.5 with "95 % (100 % for sand) of MAASHTO density for lower selected layer and 95% (100% for sand) of MAASHTO density for upper selected layer".

Add the following to DM 8.3.5:

The rate for selected layers from commercial sources shall, in addition to the provisions of DM 8.3.5, allow for locating the source, complying with all the applicable precautions as set out in DM 5.1, obtaining the material, selection and transport from the source to the point on the road where it is going to be used. No payment shall be made for the removal and replacement of unsuitable imported material.

PS DM 8.3.7 **Cut to Spoil or Stockpile From ..... Unit : m3**

Add the following to DM 8.3.7:

Payment for temporary stockpiling shall be made under DM 8.3.11, only if so instructed in writing by the Engineer.

PS DM 8.3.11 **Extra-over for temporary stockpiling of material ..... Unit : m3**

Add the following to DM 8.3.11:

The rate will be extra over the rate for item 8.3.7. Payment for temporary stockpiling shall be made only if so instructed in writing by the Engineer. Rate to include for re-use, compaction and levelling of stock pile material on site as instructed by engineer.

PS DM 8.3.12 **Overhaul.....Unit: m3 or m3.km**

Substitute DM 8.3.12 with the following:

The provisions of clause D 8.3.6 shall apply mutatis mutandis. There will be no overhaul for the removal and spoiling of surplus or unsuited materials to the dumping site. The cost thereof shall be included in the rates for the "cut to spoil" operation.

PS DM 8.3.17 **Trim, Shape and Compact Sidewalks ..... Unit : m³**

The area to be trimmed is the area from the back side of the kerbs to the boundary of the road reserve, or such wider area necessitated by the road prism.

Measurement and payment for the above shall be restricted to areas ordered in writing by the Engineer.

The rate shall cover the cost of trimming and shaping the sidewalks to the lines, levels and dimensions as shown on the drawings, of acquiring additional material to compensate for any material lost due to weather or other reasons, and of the compaction of any loose or disturbed material to 93 % of MAASHTO density (100 % for sand).

PS DM 8.3.21 **Existing Services That Adjoin Excavation for Streets ..... Unit : m**

The provision of items DB 8.3.5(a) and DB 8.3.5(b) shall apply mutatis mutandis.

PS DM 8.3.22 **Existing Services Intersecting Excavation for Streets ..... Unit : No**

The quantity is the number of each service, as indicated in the schedule of quantities, which intersects the excavation for streets.

Separate items will be provided for the depth increments as scheduled.

The rate for the crossing of services below the level of the road-bed, measured to the top of the service, covers all additional costs in respect of excavation, irrespective of the method, the protection and ensuring of the continuous functioning thereof and the cost of all repair work and/or subsequent costs arising from damage to the service.

The rate for services that are not fully covered by the road-bed shall, in addition to the above-mentioned requirements, cover all additional costs in respect of excavation and back filling with material as required for the relevant pavement layer as well as for compacting to the specified minimum density of the relevant pavement layer.

Services with a depth of cover of more than 500 mm shall not be measured and paid for.

SANS1200 G : CONCRETE (STRUCTURAL)

G 3 **MATERIAL**

PS G 3.2.1 **Applicable Specifications**

Substitute G 3.2.1 with the following:

All cement types shall comply with the requirements of SANS EN 197-1.

For this contract CEM I portland cement shall be used.

Where Malmesbury hornfels (shale) is used as aggregate in concrete, a blend (by mass) of 50 % CEM I 42,5 or CEM I 42,5R and 50 % milled granulated blast-furnace slag shall be used in the concrete mix.

PS G 3.2.3 **Storage of Cement.**

Add the following to G 3.2.3:

Consignments of cement shall be used in the same sequence as that in which they are delivered to site. No cement shall be used which has been stored on site for a longer period than 6 (six) weeks. All cement so stored for a longer period than 6 (six) weeks, all cement damaged in any way, and all cement which does not comply with the specification, shall be removed immediately and permanently from the site.

PS G 3.5.2 **Air-entraining Agents**

Substitute G 3.5.2 with the following:

Air-entraining agents shall not be used in concrete.

G 4 **PLANT**

PS G 4.5.3 **Ties**

Add the following to G 4.5.3:

Permanent metal ties shall have a minimum concrete cover of 40 mm after formwork has been removed.

Tie holes shall be filled with an approved expansive cementitious grout similar to "Durabed" of ABE. The product shall be prepared to a non-slump consistency, but where no cracking occurs when pressed into a firm ball. Trial mixes shall be made to arrive at the required working consistency.

G 5 **CONSTRUCTION**

G 5.1 **REINFORCEMENT**

PS G 5.1.3 **Cover**

Substitute G 5.1.3 with the following:

The cover of concrete over reinforcement, unless otherwise indicated on the drawings, shall in no case be less than 40 mm.

PS G 5.2.1 **Classification of Finishes**

Add the following to G 5.2.1:

The following surface conditions are required on the various portions of the finished concrete:

(a) **Rough**

Concealed surfaces and surfaces more than 150 mm below final ground level.

(b) **Smooth**

All surface finishes not classified as "rough" in paragraph (a) shall be classified as "smooth". All exposed arrises (i.e., where the angle between adjacent sides is 110° or less) unless otherwise indicated on the drawings, shall be chamfered 20 mm x 20 mm by means of triangular fillets fixed to the formwork.

PS G 5.2.5 **Removal of formwork**

In Table 2 of G 5.2.5.2, substitute “portland cement and portland cement 15” in columns 2, 3 and 4 with “CEM 1 portland cement, delete columns 5, 6 and 7 and substitute “portland blast-furnace cement” in columns 8, 9 and 10 with “CEM III blast-furnace cement or blends of CEM I portland cement with milled granulated blast-furnace slag”.

PS G 5.4 **Pipes and Conduits**

Add the following to G 5.4:

All pipes and specials which must be installed in the floors and walls of structures shall be embedded in the concrete during the casting of such concrete. No holes shall be left for the later installation of pipes and specials, without the written approval of the Engineer.

Where such holes have been approved by the Engineer, the Contractor shall be responsible for the grouting-in of such pipes or specials with an approved expansive cementitious grout as specified in PS G 4.5.3, regardless of whether or not these have been supplied by himself. The Contractor shall provide a smooth, dense and waterproof finish around the pipes or specials.

The clear space between pipes of any kind embedded in reinforced concrete and the clear space between such pipes and reinforcement shall at any point be not less than -

(a) 40 mm, or

(b) 5 mm plus the maximum size of coarse aggregate,

Whichever is the greater.

G 5.5 **CONCRETE**

PS G 5.5.1.5 **Durability**

Substitute G 5.5.1.5 with the following:

Concrete shall be so proportioned to ensure that the water/cement ratio does not exceed 0,5 and, to ensure workability, water-reducing admixtures of approved manufacture shall be used in preference to increasing the cement content.

PS G 5.5.1.7 **Strength concrete**

Add the following to G 5.5.1.7:

The grade of strength concrete and the maximum nominal size of coarse aggregate for each portion of the works, unless otherwise indicated on the drawings, shall be as follows:

(a) Mass concrete under floors and foundations ..... 20 MPa/19 mm

(b) Blinding layers ..... 10 MPa/19 mm

(c) Encasing of pipes ..... 20 MPa/19 mm

(d) Strip foundations ..... 30 MPa/19 mm

(e) Benching and screeds ..... 25 MPa/10 mm

(f) All reinforced concrete ..... 30 MPa/19 mm

PS G 5.5.7 **Construction Joints**

Add the following to G 5.5.7.1:

Construction joints shall be limited to the minimum and shall only be made in positions as shown on the drawings or in positions as specifically approved by the Engineer. Construction joints between tank bottoms, floors, or wall bases, and the walls standing on them shall not be made flush with the supporting surface, but shall be made in the wall 150 mm above the base. The 150 mm high riser wall shall be cast as an integral part of the bottom, floor or base, i.e. the concrete in the riser shall be deposited simultaneously with the concrete in the bottom, floor or base adjacent to it. Where there is a fillet at the bottom of a wall, the construction joint shall be made 150 mm above the fillet.

A PVC waterstop without centre bulb shall be installed at all construction joints in walls of water-retaining structures. The size of the waterstops shall be 150 mm in walls thinner than 200 mm and 200 mm in walls of 200 mm thickness and more.

PS G 5.5.7.4 **Expansion joints**

Expansion joints shall be formed in positions and in accordance with details as shown on the drawings. All expansion joints shall be formed with an approved closed cell polyethylene fill material similar to "SPV 120" as supplied by Sondor, with a single part polyurethane sealant similar to Silkaflex – PRO 2HP as supplied by Sika. Rearguard S-type PVC waterstops with centre bulbs shall be installed under floors and Hydrofoil PVC waterstops with centre bulbs in walls, as shown on the drawings.

All sealants, fill material and waterstops shall be installed strictly in accordance with the specification of the manufacturers and to the satisfaction of the Engineer. The sealant shall be installed in one operation and jointing to already hardened sealant will not be permitted.

PS G 5.5.7.6 **Bond breaker under floor**

A 500 micrometre polyethylene bond breaker shall be installed between the blinding layer and the floor, where indicated on the drawings.

PS G 5.5.9 **Adverse Weather Conditions**

Add the following to G 5.5.9.1:

No material having a temperature of below 5 °C shall be used for concrete, and no concrete shall be deposited when the ground or air temperature is below 2 °C. Furthermore, if the air or ground temperature is likely to fall below 2 °C within twelve (12) hours after depositing of concrete, no concreting shall be done without the written consent of the Engineer. If such consent is given the Contractor shall heat the aggregate stockpiles and mixing water, and defrost the formwork and reinforcement.

PS G 5.5.10 **Concrete Surfaces**

Add the following to G 5.5.10.1:

Concrete surfaces under screeds, granolithic floor finishes or benching, and surfaces of strip foundations and footings shall be brought up to a plane, uniform surface with a suitable screed board.

PS G 5.5.10.4 **Wood-floated finish**

Where wood floating is specified or scheduled, the surface shall first be given a finish as specified in G 5.5.10.1 and after the concrete has hardened sufficiently, it shall be floated to a uniform surface free from trowel marks. The screeded surface shall be wood-floated, either by hand or machine, only sufficiently to produce a uniform surface free from screed marks.

PS G 5.5.10.5 **Steel-floated finish**

Where steel floating is specified or scheduled, the surface shall be treated as specified in PS G 5.5.10.4 except that, when the moisture film has disappeared and the concrete has hardened sufficiently to prevent laitance from being worked to the surface, the screeded surface shall be steel trowelled under firm pressure to produce a dense, smooth, uniform surface free from trowel marks.

PS G 5.5.11 **Watertight Concrete**

Substitute G 5.5.11 with the following:

PS G 5.5.11.1 **General**

All structures that are designed to retain water or to keep water out, shall be regarded as watertight structures.

PS G 5.5.11.2 **Requirements and tests for watertightness of structures**

The completed structure shall be watertight, and the quality and finish of the work shall be such that no after-treatment of the work such as plastering, or cement wash is necessary to ensure compliance with this requirement.

The works will not be certified complete until the structures enumerated in PS G 5.5.11 has been proved by testing to be watertight.

Upon completion of construction and when so agreed by the Engineer, the structure shall be filled by the gradual admission of water until, the water level reaches the designed maximum level. The water level shall then be carefully noted and recorded by the Engineer in relation to a fixed benchmark, and the structure shall be allowed to remain filled for a period of two (2) weeks or such longer time as may be required to permit complete saturation of the concrete. During this period, readings will be taken by the Engineer and the results so obtained will be available for the information of the Contractor.

At the end of this period more water shall be added, if necessary, to bring the water level back to the designed maximum level and the water shall be left undisturbed for a period of at least four (4) days during which time the level shall again be recorded by the Engineer at regular intervals. The structure shall be considered to be watertight if the drop in water level does not exceed 6 mm in 96 (ninety-six) hours in the case of a roofed structure and if no leakage is apparent.

The acceptable drop in level in the case of an unroofed structure shall be such that it allows for normal evaporation during the time of the test.

If appreciable leakage is evident at any stage of the filling or testing or if, in the opinion of the Engineer, the degree of watertightness is unsatisfactory, the Contractor shall, when so ordered by the Engineer, discontinue the test immediately and at his own expense take approved steps to rectify the work. The work of rectification shall be continued assiduously until, on repetition of the test procedure, a satisfactory test result is obtained, and the degree of watertightness is acceptable.

The Engineer shall have the right to retest the structure before the expiry of the period of maintenance and the results of these tests will be made available to the Contractor. If these tests indicate to the Engineer that the degree of watertightness is unsatisfactory, the Engineer (before issuing the final certificate) will be entitled to order the Contractor to rectify the work at his own expense in such a manner as will cause least interruption to the running of the works and will ensure that the degree of watertightness of the structure is satisfactory.

Backfilling around structures shall not commence until a satisfactory test result has been obtained.

The watertightness of the dry well of the pump station shall be monitored visually until the end of the defects liability period. If any damp penetration from the outside is noticed, the Contractor shall take immediate remedial steps.

The Engineer shall have the right to retest the structure before the expiry of the period of maintenance, and the results of these tests will be made available to the Contractor. If these tests indicate to the Engineer that the degree of watertightness is unsatisfactory, the Engineer (before issuing the final certificate) will be entitled to order the Contractor to rectify the work at his own expense in such a manner as will cause least interruption of the water supply to consumers and will ensure that the degree of watertightness of the structure is satisfactory.

PS G 5.9 JOINING NEW CONCRETE TO EXISTING

Where partial demolition is required for extension work to existing structures, the contact face shall be cut to predetermined line and level, and any loose and fragmented material shall be removed, and projecting steel cleaned and bent as directed by the Engineer. Where partial demolition is not required but extension work only, the contact surface shall be scabbled and cleaned of all dirt and loose particles.

If dowels are required, they shall be installed in holes drilled into the existing structure, in accordance with the details shown on the drawings, and secured by means of an approved type of epoxy bonding compound such as EPIDERMIX 372 or similar.

Fresh concrete shall be bonded to the old concrete with an approved type of epoxy bonding compound, such as EPIDERMIX 344 or similar.

G 8 **MEASUREMENT AND PAYMENT**

G 8.1 **MEASUREMENT AND RATES**

PS G 8.1.1 **Formwork**

Delete the following in G 8.1.1.3(c):

"and for different prop heights for beams and slabs".

PS G 8.1.3 **Concrete**

Add the following to PS G 8.1.3.1(d):

Strip foundations and encasement of pipes shall be cast directly against the sides and bottoms of excavations. No payment shall be made for additional concrete in overbreak.

Delete the full stop at the end of G 8.1.3.3(a) and add the following:

"and special steps necessary before depositing concrete during cold weather, as prescribed in PS G 5.5.9".

G 8.4 **SCHEDULED CONCRETE ITEMS**

PS G 8.4.4 **Unformed Surface Finishes ..... Unit: m^2**

Add the following to G 8.4.4:

The concrete surface finishes under screeds, granolithic finishes or benching as prescribed in PS G 5.5.10 shall not be measured separately. The rates for the related concrete items shall also cover the cost of these surface finishes.

PS G 8.4.8 **Concrete complete with formwork and/or trowel finish ..... Sum or m^3**

The rate shall cover the cost of the provision of concrete (made from ordinary Portland cement, unless otherwise scheduled), mixing, testing, placing, compacting, the forming of stop-ends and unforeseen construction joints, striking-off or levelling as applicable, trowelling and curing and repairing where necessary, together with the cost of all parts of formwork in contact with the concrete and the necessary bearers, struts, and other supports, plus the layout and plant necessary to erect and strike such formwork.

SANS 1200 L: MEDIUM PRESSURE PIPELINES

PS L 3.1 **GENERAL**

Substitute the first sentence of L 3.1 with the following:

Types and classes of pipes shall be as scheduled.

Pipes and jointing systems suitable for the pressures must be offered.

All valves must be able to open or close under full differential pressure.

PS L 3.4 **STEEL PIPES, FITTINGS AND SPECIALS**

PS L 3.4.2 **Pipes Of Nominal Bore Up To 150 mm**

Substitute “screwed in L 3.4.2 with “flanged”.

PS L 3.4.3 **Pipes Of Nominal Bore Over 150 mm**

Add the following:

All mild steel pipes must be manufactured from Grade B steel with minimum plate thickness of 6,0 mm except where specified otherwise.

PS L 3.8 **JOINTING MATERIALS**

PS L 3.8.4 **Loose Flanges**

Substitute the first sentence of the last paragraph of L 3.8.4 with the following:

The dimensions and drilling of standard flanges for pipes and fittings shall comply with the requirements of SABS 1123. Flanges shall be machined flat, i.e. without a raised joint face. Puddle flanges shall have the same dimensions as standard flanges but shall not be drilled.

Faces of flanges which will be in contact with jointing gaskets shall receive a protective coating similar to the corrosion protection specified for the internal surface of the pipes and fittings, of such thickness and consistency as will not impair the air/gas/water tightness of the joint.

The jointing gaskets shall comply with the requirements of BS3063 and shall be cut to the full width of the flange and holed for bolts.

PS L 3.8.5 **Joints, Bolts, Nuts And Washers**

Substitute L 3.9.5 with the following:

All bolts shall be supplied with two washers and of sufficient length so that a minimum of 2 threads are exposed from the nut after tightening.

All bolts, nuts and washers are to be hot dip galvanised. Bolts and nuts shall comply with the requirements of SABS 135.

CORROSION PROTECTION

PS L 3.9.1 **Cast Iron Pipes and Fittings**

Substitute L 3.9.1 with the following:

All internal surfaces shall be grit blasted to SA 2½ standard and then coated with Copon EP2300 epoxy paint to a minimum thickness of 350 micron.

PS L 3.9.2.1 **Steel pipes of nominal bore up to 150 mm**

Add the following to L 3.9.2.1:

The requirements of PS L 3.9.2.2 shall apply mutatis mutandis.

PS L 3.9.2.2 **Steel pipes of nominal bore over 150 mm**

Add the following to L 3.9.2.2:

All mild steel pipes under this contract shall be treated in accordance with L 3.9.2.2(b)(2) on the inside and the outside, with a polyamide-cured epoxy system similar and equal to Copon EP 2300 or Amercoat 385. The Contractor shall furnish the Engineer with certificates of tests in accordance with L 7.4.

Substitute "250 μm" in L 3.9.2.2(b)(2) with "350 μm".

PS L 3.9.5 **Joints, Bolts, Nuts and Washers**

Substitute L 3.9.5 with the following:

All joints, bolts, nuts and washers shall be stainless steel.

PS L 3.10 **VALVES**

PS L 3.10.1 **Gate Valves**

All gate valves shall comply with the requirements of SABS 664 and shall be suitable for a maximum working pressure of 5 MPa. All gate valves must be supplied with a square spindle nut, suitable to be used with a valve key.

Gate valves shall have flanged unless shown differently on the drawings and shall open anti-clockwise. The direction for opening and closing shall be permanently displayed on the valves. Valves shall have rising spindles.

Compression shut-off valves with rubber protected gate and smooth finish without recess inside, may be used.

All flanged gate valves shall be drilled according to SABS 1123 Table 1600/3. Pipes shall not be tested against a closed valve. Thrust blocks for test sections shall be approved by the Engineer prior to testing of pipes.

All internal surfaces shall be grit blasted to SA 2½ standard and then coated with Copon EP 2300 epoxy paint to a minimum thickness of 225 micron.

PS L 3.10.2 **Butterfly Valves**

Butterfly valves shall be of the wafer pattern to be installed between two flanges in the water main with either short collar repair couplings or Viking Johnson couplings.

The valves shall be fitted with a gearbox with a stainless steel shaft. The body shall be clad with rubber.

Valves shall be similar to the "Compact" type with a working pressure of 1,6 MPa. Pipes shall not be tested against closed butterfly valves.

All internal surfaces shall be grit blasted to SA 2½ standard and then coated with Copon EP 2300 epoxy paint to a minimum thickness of 350 micron.

PS L 3.10.4 **Air Valves**

Air valves for potable water shall be suitable for a working pressure of 1,6 MPa. All air valves shall be combination air valve C70 (catalogue ID WW-2”-C70-SP-C-D-16-EB) of Bermad or similar.

The branch of the tee on the main pipe shall be the same as diameter of the main pipe.

All air valve installations shall be supplied with an isolating valve and distance piece between the air valve and the branch of the tee, and other fittings shown on the drawings.

Combination air valves shall have a straight flow body with nominal (equal) inlet and outlet size as well as an aerodynamic full-body kinetic shield. The air valve must be dynamically sealed to prevent leakage under low pressure conditions. Outlet of air valve must be downwards. Parts of air valve must be fully corrosion-resistant. The air valve must have built in adjustable surge protection (anti-slam

PS L 3.10.5 **Scour valves**

Scour valves shall be suitable for a working pressure of 1,6 MPa.

Scour valves shall consist of a flanged gate valve of 100 mm dia coupled horizontally to a flanged cast iron scour valve tee. The outlet pipe shall be a 100 mm nominal diameter steel pipe with 4 mm wall thickness and Copon coated. The outlet shall discharge above ground level in the direction of the fall of the natural ground surface, perpendicular to the main pipe. The outlet end of the pipe shall be cut diagonally and supplied with a cover that is hinged and that will remain closed unless it is forced open by the water. The hinge shall be non-removable.

Scour valves on 75 mm dia pipes shall be the same as above except that a 75 x 75 mm dia fire hydrant tee shall be used and that the gate valve and outlet pipe shall both be 75 mm diameter.

PS L 3.10.6 **Bulk Water Meter**

New bulk water meters shall be installed as shown on the drawings.

Functional requirement of bulk water meters

DESCRIPTION	METER 1 (PHASE 1)
1. Detail op pipeline	Ø 200 mm uPVC Class 9
2. End connections	Flanged, SABS 1123 Class 1600/3
3. Maximum working pressure	90 m
4. Maximum flow rate	80 ℓ/s

Technical requirements for the meters

The bulk water meters shall be of the free-flow type manufactured from corrosion resistant material in a cast iron casing. A distance as specified by the Supplier, before and after the water meter must be kept free of any obstructions such as bends, valves, reducers, etc.

The flow reading shall be given on a dial face and totalising shall occur by means of a roller counter and shall be accurate within ± 2 %.

The meter shall be manufactured in such a way that all moving parts can be removed and replaced from the top without removing the whole meter. Replacement parts should be freely available. Each water meter installation shall be supplied with a gate valve on the upstream side of the water meter at a distance as indicated on the drawings. This gate valve shall be provided for under the relevant item in the schedule of quantities.

The meter shall have a connection point to send flow data by signal to a computer, similar to that of a Meinecke/Kent meter.

Installation of meter

The meter shall be installed by a person approved by the supplier in order to validate the guarantee.

All accessories for the complete installation shall be supplied by the Contractor.

All metal work shall be painted according to specifications after the testing and completion of the installation.

PS L 3.10.7 **Reflux Valves (non return valves)**

Reflux valves shall be suitable for a working pressure of 1,6 MPa and, unless otherwise indicated, shall be flanged.

The casing and flap shall be manufactured from close-grained cast iron with a brass face on the flap that close onto a corresponding brass plane in the casing.

The hinge pin shall swivel freely in bearings on both sides of the casing.

Cone-shaped rubber-seal reflux valves with stainless steel cones may be used if approved by the Engineer.

PS L 3.10.8 **Control Valves**

The casing of the control valves shall be manufactured from close-grained cast iron and the flanges shall be drilled according to SABS 1123 Table 1600/3.

The valves shall be of the diaphragm single bed ball-type controlled hydraulically by a pilot valve. The main valves shall be fixed on three sides with single removable bronze beds and synthetic rubber disks with a rectangular cross-section, with disk clamps. No packing material will be allowed and repairs must be done without removing the valve from the pipeline.

The design must be such that no water can come from the main valve into the pilot valve system. Bermad type 700 with a V-port throttling plug, or a similar product, must be used. If the pressure in the main pipe is not sufficient to control the valve, a connection shall be made with the pump line.

Functional requirements of the control valve

DESCRIPTION	CONTROL VALVE ND 200 mm	CONTROL VALVE ND 100 mm	CONTROL VALVE ND 75mm
Pipe details	200 uPVC/12	110 uPVC/9	75 HDPE
End connections	Flanged, SABS 1123 Class 1600/3	Flanged, SABS 1123 Class 1600/3	To suite HDPE pipe
Maximum working pressure	160 m	160 m	90 m
Minimum working pressure	5 m	5 m	1 m
Maximum flow rate	80.0 ℓ/s	50 ℓ/s	10 ℓ/s
Minimum Valve size	100mm	100mm	50mm
Proposed Model Nr	WW-04ES-730-Y-C-16-EB-PB-VF	WW-04ES-753-66-3Q-Y-C-16-EB-PB-VF	Caleffi DA pressure reducing valve
Type of control	Pressure sustaining valve with V-port and large area control filter. Pressure sustaining set at **22m**	Level control bi-level and pressure sustaining with high pressure relief override, V-port and large area control filter. Pressure sustaining set at **5m**	Flow control set at maximum 0.232 ℓ/s with pressure kept constant with orifice

PS L 3.10.9 **Meter for Water Connection**

The water meter must be within a RDP chamber with a 75 mm dia PSM piston type Kent watermeter, Class C. The meter shall consist of a strainer and a calibration device and all moving parts shall be replaceable without removing the meter from its setting.

In and outlets must be provided for 45°, 25/32 mm HDPE pipe, push fit type.

The meter shall be guaranteed for 5 years by the supplier to comply with the under mentioned specification.

Nominal size (mm)	25
Permanent flow rate (m3/h)	3,5
Minimum flow rate qmin± 5 % (ℓ/h)	35

Minimum flow at which meter registers (ℓ /h)	13,2

L 3.11 **MANHOLES AND SURFACE BOXES**

PS L 3.11.4 **Step Irons**

Substitute L 3.11.4 with the following:

Step irons shall consist of polypropylene coated 12 mm high tensile steel such as Calcamite or similar. The installation of the step irons shall be in accordance with the specification of the manufacturer.

PS L 3.11.6 **Surface Boxes**

Add the following to L 3.11.6:

The type of cast iron boxes shall be as specified on the drawings.

L 4 **PLANT**

PS L 4.3 **TESTING**

Add the following to L 4.3

The Contractor must ensure that the test equipment is in good order and that it is calibrated.

L 5 **CONSTRUCTION**

L 5.1 **LAYING**

L 5.1.4 **Depths And Cover**

PS L 5.1.4.1 **Cover**

Add the following to L 5.1.4.1:

The minimum cover over uPVC pipes must be at least 800 mm.

The minimum cover of main water pipelines in road reserves and under streets must be 1 000 mm and carried out according to L 5.1.4.2.

PS L 5.1.4.2 **Deflection**

Substitute “1,5° per joint in the case of FC pipes” in L 5.1.4.2 with “3° per joint in the short case of FC pipes with FC couplings and 4° in the case of FC pipes with cast-iron short collar repair couplings”. The maximum deflection for uPVC pipes with uPVC couplings is 3°.

PSL 5.5 **ANCHOR BLOCKS**

Measurements for anchor blocks will be determined on site by the Engineer after each position has been inspected.

L 5.6 **VALVE AND HYDRANT CHAMBERS**

PS L 5.6.1 **General**

Substitute the first sentence of L 5.6.1 with the following:

The drawings of valve and hydrant chambers, which are bound into the document, shall supersede the corresponding drawings in the standard specification.

PS L 5.9 **LIFTING AND RELAYING OF EXISTING PIPES**

Add the following to L 5.9:

Existing water pipes at certain points shall be lifted and relayed deeper in the same position. The Contractor must make timeous arrangements with the local authority.

PS L 7 **TESTING**

PS L 7.3 **STANDARD HYDRAULIC PIPE TEST**

PS L 7.3.1 **Test pressure and time of test**

Add the following to L 7.3.1.1:

Pipes shall not be tested against isolating valves. Special blank flanges or end caps, fully anchored, shall be provided for testing.

Substitute L 7.3.1.2 with the following:

The test pressure for field-testing shall be 1,5 times the rated maximum working pressure of the pipe e.g. class 9-mPVC pipe to 1,35 MPa.

Substitute L 7.3.1.3 with the following:

The test pressure applied according to L 7.3.1.2, must, with allowance for any level differences along the pipeline, be such that the pressure at any point in the pipeline will be at least 1,25 times and not more than 1,5 times the rated working pressure of the pipe.

S L 8 **MEASUREMENT AND PAYMENT**

PS L 8.2 **SCHEDULED ITEMS**

PS L 8.2.3 **Extra-over 8.2.1 for the Supplying, Fixing and Bedding Of Valves ..... Unit: No**

Add the following to L 8.2.3:

Valves are measured and paid for per item, complete with the inclusion of the cutting of pipes, couplings, extra excavation and all extra material and labour that is required, including tees, fittings, isolating valves (e.g. under air valves), complete as shown on the drawings. Flanged distance pieces shall be included in the rate for fire hydrants.

PS L 8.2.11 **Anchor/Thrust Blocks and Pedestals ..... Unit: m³**

Anchor and thrust blocks shall be measured per cubic metre concrete and the tendered rate shall include for all formwork and reinforcement (where specified) for the required dimensions.

PS L 8.2.14 **Manholes ..... Unit: No**

Add the following to L 8.2.14:

Overflow boxes and pipe outlets shall, as in the case of manholes, be measured and paid for per number and shall be all inclusive as shown on the drawings.

PS L 8.2.16 **Cut Into and Connect To Existing Mains** .....**Unit: No**

The tendered rate shall include full compensation for all arrangements with the relevant authorities, isolating the main, cutting into the main to accommodate the connecting fitting, dewatering, excavating, backfilling, removing of excess material, taking steps to prevent the ingress of soil, stones and other material into the main as well as all material and labour to connect the pipe.

PS L 8.3 **WATER METER ..... Unit : No**

The rate for water meters shall cover the cost of the provision of a flanged bulk water meter with the required fittings, couplings, piping, etc. to be connected to the appropriate pipes as well as the complete installation, testing and commissioning of the meter, as shown on the drawing.

PS L 8.4.1 **CONTROL VALVE (ND 200 mm) ..... Unit : No**

The rate for control valve 100 mm and 200 mm shall cover the cost of the provision of a flanged control valve with strainer, check valve, butterfly valve, required fittings, couplings, piping, etc. to be connected to the appropriate pipes and the complete installation, testing and commissioning of the valve, according to the drawing.

PS L 8.4.2 **CONTROL VALVE ND 75 mm ..... Unit : No**

The rate for control valve 75 mm shall cover the cost of the provision of a flanged control valve with the required fittings, couplings, piping, etc. to be connected to the appropriate pipes as well as the pilot valve, copper pipe, etc. and the complete installation, testing and commissioning of the valve, as shown on the drawing, including the installation of a stilling tank and float, complete according to the drawing

The rate shall also cover the cost and installation of a 75 mm dia HDPE Type IV Class 12 pipe, length 15 m, ball valve type stopcock, saddle and connection on existing Ø 75 mm uPVC Class 9 pipe.

The rate shall also cover the complete cost of installing a 32 mm dia HDPE duct through the reservoir wall for the 20 mm dia HDPE pipe to be provided for.

PS L 8.5 **WATER CONNECTION FOR FARMERS ..... Unit : No**

The water connection rate shall cover the cost of all excavations, backfilling, bedding, removal of surplus material, as well as the following, complete as indicated on the drawing:

a) A saddle and coupling to fit the relevant diameter of water main specified;

b) All HDPE Type IV Class 12 piping required up to the meter;

c) All tees, 90° bends and reducers required;

d) The effective sealing of the connection pipe;

e) Lockable RDP combination meter/valve chambers are to be provided with stop tap and adaptors.

The rate shall also cover the cost of additional excavation and backfill around the main line and the connection to the existing main line.

Imported material for bedding, blanket and main fill will be measured under the relevant items for main pipes.

PS L 8.6 **5 000 LITER WATER TANKS FOR FARMERS ..... Unit : No**

The rate for the 5 000 liter water tank shall cover the all the costs, complete according to the drawing.

a) All excavations and compaction of insitu material (93% of MAASHTO density) required for concrete base;

b) 10 MPa mass concrete under concrete base, thickness determined on site (allow 150mm for tender purposes);

c) 3,0m x 3,0m x 300mm thick 30 MPa concrete base with 20x20mm chamfer and steel float finishing;

d) All reinforcing and formwork required for the concrete base;

e) Supply and installation of the 5 000 liter JoJo or similar water tank;

f) Supply and connect 25mm/32mm dia HDPe connection pipe (allow 5,0m long) to the inlet of the water tank, including the supply and installation of a cobra float valve required inside the water tank.

Site clearance, fencing and the gate will be measured under the relevant items.

PS L 8.7 **LADDER FOR EXISTING RESERVOIR ..... Unit : No**

The rate shall cover all the cost to supply and install the heavy duty hot dipped galvanised ladder, complete as indicated on the according to the drawing

PS L 8.8 **STEEL PIPES, BENDS AND FITTINGS FOR EXISTING RESERVOIR ..... Unit : Sum**

The rate shall cover all the cost to supply and install the heavy duty hot dipped galvanised steel pipes, bends and fittings, complete as indicated on the drawing no. 278840VS0/9. The rate shall also include the cost to drill the opening in the existing reservoir wall, fixing of puddle flange against wall and repair thereof as specified on the drawing.

Excavation, material for bedding, mass concrete thrust block, blanket and main fill will be measured under the relevant items for main pipes.

SANS 1200 LB: BEDDING (PIPES)

LB 3 **MATERIALS**

PS LB 3.1 **SELECTED GRANULAR MATERIAL**

Substitute LB 3.1 with the following:

Selected granular material shall be an aggregate, sand or granular material, all of a non-cohesive nature and free from any organic material, of which the grading analysis shows 100 % passing a 13,2 mm sieve and not more than 5 % passing a 0,075 mm sieve.

Only if approved by the engineer may sand from the trench excavations be used as selected material.

PS LB 3.2 **SELECTED FILL MATERIAL**

Substitute LB 3.2 with the following:

The requirements of PS LB 3.1 shall apply mutatis mutandis.

PS LB 3.3 **BEDDING**

Add the following to LB 3.3:

All pipes shall be classified as flexible pipes and shall be laid on flexible pipe bedding class including erf connections, which shall also be classified as flexible pipes. Cable bedding is specified separately.

LB 3.4 **SELECTION**

PS LB 3.4.1 **Suitable Material Available from Trench Excavation**

Replace the first sentence of LB 3.4.1 with the following:

Notwithstanding the requirements DB 3.7 and LB 3.4.1 relating selected excavation methods, the Contractor must follow selected excavation methods and provide or use plant that will prevent material that is suitable and necessary for bedding being contaminated.

PS LB 3.4.2 **Suitable Material not Available from Trench Excavation**

Add the following to LB 3.4.2:

No payment will be made for overhaul and all transport shall be regarded as freehaul and the costs thereof shall be included in the tendered rate.

LB 5 **CONSTRUCTION**

LB 5.1 **GENERAL**

PS LB 5.1.4 **Compacting**

Substitute "90 % of MAASHTO" in LB 5.1.4 with "93 % of MAASHTO (100 % for sand)".

LB 8 MEASUREMENT AND PAYMENT

LB 8.1 PRINCIPLES

PS LB 8.1.1 Supply of Bedding Materials Measured Separately

Add the following to LB 8.1.1:

Payment for bedding material and selected fill material is only made if the selected trench-excavation material cannot be used in the same position as bedding material but has to be obtained from another part of the site of works or designated borrow pits, or from commercial sources.

PS LB 8.1.4 Separate Items For Cradle and Blanket

Substitute LB 8.1.4 with the following:

No distinction shall be made as with regard to material for the bedding cradle and selected fill blanket, and the material shall comply with the requirements for material for bedding cradle.

PS LB 8.1.5 Disposal Of Displaced Material

Add the following to LB 8.1.5:

Surplus displaced material shall be dumped and levelled at the spoil site.

No payment will be made for overhaul and all transport shall be regarded as freehaul and the costs thereof shall be included in the tendered rate.

PS LB 8.1.6 Freehaul

Substitute LB 8.1.6 with the following:

No payment will be made for overhaul and all transport shall be regarded as freehaul and the costs thereof shall be included in the tendered rate.

LB 8.2 SCHEDULED ITEMS

LB 8.2.2 Supply Only Of Bedding by Importation

PS LB 8.2.2.2 From Borrow Pits (provisional)

Add the following to LB 8.2.2.2:

No payment will be made for overhaul and all transport shall be regarded as freehaul and the costs thereof shall be included in the tendered rate.

PS LB 8.2.2.3 From commercial sources

Add the following to LB 8.2.2.3:

The rate shall cover the cost of obtaining, handling and transport regardless the distance, of the required bedding material from the Contractors supplier, the delivery thereof at positions that are spaced along the trench in such a way as suits the working method of the Contractor, as well as the removal of material displaced by this importation to the commercial dump site of the Contractors choice.

No payment will be made for overhaul and all transport shall be regarded as freehaul and the costs thereof shall be included in the tendered rate.

LB 8.2.2.4 **From stockpile (provisional)**

a) Selected granular material ..... Unit : m³

b) Selected fill material ..... Unit : m³

The rate shall cover the cost of obtaining, handling and transport regardless the distance, of the required bedding material from the stockpile, the delivery thereof at positions that are spaced along the trench in such a way as suits the working method of the Contractor, as well as the removal of material displaced by this importation to the dump site which will be indicated during the site inspection.

No payment will be made for overhaul and all transport shall be regarded as freehaul and the costs thereof shall be included in the tendered rate.

PS LB 8.2.5 **Overhaul Of Material For Bedding Cradle And Selected**

Substitute LB 8.2.5 with the following:

No payment will be made for overhaul and all transport shall be regarded as freehaul and the costs thereof shall be included in the tendered rate.

SANS 1200 ME: SUBBASE

ME 3 **MATERIALS**

ME 3.2 **PHYSICAL PROPERTIES**

PS ME 3.2.1 **Subbase Material**

Substitute ME 3.2.1 with the following:

a) Materials of G5 and G6 quality for use in the unstabilised subbase shall comply with the requirements of SANS 1200 M 3.3.3.

b) Materials of G7 quality for use in the unstabilised subbase shall comply with the requirements as specified in SABS 1200 M 3.3.3, except that the maximum aggregate size after compaction shall not exceed 63 mm.

ME 3.3 **STABILISING AGENT**

PS ME 3.3.1 **General**

Substitute ME 3.3.1 with the following:

Where ionic stabilisation is required, the stabilising agent shall be approved by the Engineer, and the rate of application shall be 0,03 ℓ/m^2 for layer thickness of 150 mm and 0,02 ℓ/m^2 for layer thicknesses of 100 mm.

ME 5 **CONSTRUCTION**

ME 5.4 **PLACING AND COMPACTION**

PS ME 5.4.1 **Placing**

Substitute "the project specification" in the second paragraph of ME 5.4.1 with "ME 6.1.4".

PS ME 5.4.5 **Work In Restricted Areas**

No additional payment shall be made for work in restricted areas and any relevant costs shall be deemed to be included in the tendered rates.

PS ME 5.5.6 **Curing**

Substitute ME 5.5.6 with the following:

Stabilised layers will be protected against desiccation during the first 7 days after construction, by lightly watering the layer to ensure the surface is always damp. Only light water sprinklers must be used seeing that heavy sprinklers will damage the layer. Any negligence to ensure above mentioned is implemented, may result into the disapproval of the layer. In that case, the Contractor will on his own costs, break up the layer, re-stabilise and compact. Compaction and indicator tests will be done on the first day after completion of construction. No other traffic,

except the vehicles that water the layer, will be allowed on the layer within 7 days after stabilising have been completed.

ME 5.7 TRANSPORT

PS ME 5.7.1 **Free-haul**

Substitute ME 5.7.1 with the following:

An unlimited free-haul distance shall apply to subbase material.

ME 7 TESTING

ME 7.2 PROCESS CONTROL AND ROUTINE INSPECTION AND TESTING

PS ME 7.2.1 **Process Control**

Substitute "1 500 m^2" with "1 200 m^2" and "5 000 m^2" with "3 000 m^2" in Table 2 of ME 7.2.1.

PS ME 7.2.2 **Routine Inspection And Testing**

Substitute the second sentence of ME 7.2.2 with the following:

No density shall be less than the specified minimum density for the relevant layer.

ME 8 MEASUREMENT AND PAYMENT

PS ME 8.2 COMPUTATION OF QUANTITIES

Substitute ME 8.2 with the following:

Measurement and payment shall be to the exact dimensions as shown on the drawings.

ME 8.3 SCHEDULED ITEMS

PS ME 8.3.11 **Preparation of Road bed to a depth of 150 mm as subbase compacted to 95 % of MAASHTO density ..... Unit : m^3**

The rate covers the cost of crust breaking up to a minimum depth of 150 mm, watering, shaping, building and compaction of subbase, final scraping, compliance with the tolerances and testing.

PS ME 8.3.12 **Connect to Existing Subbase ..... Unit : m**

The tendered rate shall be all inclusive for labour, materials and equipment required to cut the existing roadway in straight lines without damage to the existing road, to connect to the new subbase.

The Contractor shall be responsible for all necessary repairs of damage to existing layers and bituminous surfaces and must allow for such repairs in the rate.

SECTION MJ: SEGMENTED PAVING

MJ 3 **MATERIAL**

MJ 3.1 **UNITS**

PS MJ 3.1.2 **Class, Strength, And Type**

Add The following to MJ 3.1.2

Street surfacing as indicated in drawings shall be paved with 60 mm thick Type S-A Class 25 precast concrete blocks (interlocking type). Sidewalks shall be paved with 50 mm thick type S-C Class 25 Pre-cast concrete blocks. Colour of paving will be determined on site.

MJ 5 **CONSTRUCTION**

PS MJ 5.7 **JOINT FILLING**

Joint filling shall be done with sand (A3 Specification).

MJ 6 **TOLERANCES**

PS MJ 6.2 **PERMISSIBLE DEVIATIONS**

Add the following to MJ 6.2:

The degree of accuracy shall be degree I.

MJ 8 **MEASURED AND PAYMENT**

MJ 8.2 **SCHEDULED ITEMS**

PS MJ 8.2.2 **Construction of Paving Complete ..... Unit ; m²**

Add the following to MJ 8.2.2

The rate shall also cover the cost of the joint filling as specified in PS MJ 5.7.

PS MJ 8.2.6 **Connection to Existing Road Surface ..... Unit ; m**

The tendered rate shall be all inclusive for labour, materials and equipment required to cut the existing road surface in straight lines without damage to the existing road, to connect to the new road surface.

The Contractor shall be responsible for all necessary repairs of damage to existing road surface and must allow for such repairs in the rate.

UPGRADING OF GROUNDWATER SUPPLY: VICTORIA WEST

TENDER NO:UB/VW/23/2022

C3.1: PROJECT SPECIFICATION: MECHANICAL SPECIFICATION PUMPS

2.1 **SCOPE**

This section of the contract covers the related design, supply, delivery, erection, installation, commissioning, testing and upholding during the period of maintenance of electrically driven borehole pumps, piping, valves, control and auxiliary gear, etc. with all accessories as described.

2.2 **PUMPS**

2.2.1 **Borehole pump**

Three (3) new pumpsets will be supplied in total.

The pump shall be of the submersible borehole type, GRUNDFOS or similar and equally approved. They borehole equipment (pump and motor) must be Variable Speed Drive (VSD). The borehole pump and motor will be equipped with solar supply.

Pump casings, impellers, guides shall be stainless steel, and the shaft shall be made of high-grade steel with suitable protecting sleeves. Bearings shall be waterproof with suitable lubrication. The rotating assembly shall be properly balanced so as not to give rise to excessive end thrust or alternatively, suitable thrust bearings shall be provided. All parts shall be of ample dimensions and strength, properly machined and assembled to ensure perfectly free running. The pumpset shall not have a overall diameter larger than 4” (102 mm).

The pump sets (VSD pump and VSD motors) shall be capable of doing the required duty at a nominal speed not exceeding 2 900 r.p.m. The VSD motors shall be sized to be not less than the maximum power requirement of the associated pump and impeller combination at maximum the duty point plus 15 %, with a tolerance of -2 %.

Pump curves and points of duty must be submitted with the tender.

2.3 **PUMP DUTY**

The pumps shall be sized for the worst-case scenario.

2.3.1 **Borehole Pump**

DESCRIPTION	**BH 16**	**BH 4**	**BH MISA**	**BH 1**
Duty point	3 ℓ/s @	1.8 ℓ/s	1.3 ℓ/s	1.7 ℓ/s
Design details:				
Flow	3 ℓ/s	1.8 ℓ/s	1.3 ℓ/s	1.7 ℓ/s
Static head	35 m	36 m	56 m	36 m
Friction losses	26m	80 m	26 m	46 m
Total head losses	46 m	78 m	52 m	68 m
Levels:				

DESCRIPTION	BH 16	BH 4	BH MISA	BH 1
Static water level (MBGL)	4 m	5 m	2.1 m	7 m
Dynamic water level (MBGL)	10 m	9 m	23 m	8 m
Pump inlet (MBGL)	30 m	35 m	40 m	25 m
Ground level at borehole	1292 m	1311 m	1289 m	1276 m
Reservoir inlet level	1 302 m	NA	N/A	N/A
END PRESSURE REQUIRED	**6 m**	**6 m**	**6 m**	**6 m**

Note: The casing size at the borehole must be confirmed on site before any equipment is purchased. (The inside diameter in the borehole casings must be measured).

MBGL : Meters below ground level.

MAGL : Meters above ground level.

2.4 PIPING AND PIPE FITTINGS

2.4.1 Piping

The Tenderer shall include for the supply and delivery to site and for the installation and testing of the purpose made piping as indicated according to drawing.

Above ground piping for the installations shall be mild steel to SANS 62 heavy wall or SANS 719 with 6 mm wall thickness. All under ground piping shall be covered in “Denso” tape and paste. Visible piping shall be painted after installation.

All discharge piping shall be flanged and drilled to SANS 1123, Table 1600/3.

Pipe-work for the borehole must be hot dipped galvanised and Copon epoxy-coated in three layers inside and outside to a TDFT of 350 micron after being shot-blasted to SA2½.

Piping for the borehole shall be ASHIRVAD uPVC pipes or similar and equally approved. The price shall include required pump and pipework couplings and standard wire-lock pipe jointing system.

The pricing shall include for all interconnecting fittings between pump, and steel pipework, as well as clamps for use during installation/removal of the pump and pipework.

The layout of pipe-work shall be such as to facilitate dismantling, inspection and maintenance.

The pipes must be properly supported and so arranged that all stresses created in the pipe line by static and dynamic forces, including recoil shock, will be taken up by suitable anchors. Pipes shall be supported on both sides to isolating valves, in positions indicated on the drawings.

The baseplate for borehole pump installation shall be a custom made, galvanised steel housing as shown on the plans.

It shall be constructed of minimum of 5 mm plate steel, supporting gussets for strength and have a removable side for access.

The housing shall be designed and that the pump and pipework is supported by the top coupling on tabletop surface. It shall also be suitable for the 2 x sleeves (2 x 32 mm HDPE) can protrude though the top plate for access to the instrumentation.

The housing shall include a minimum of 4 mounting/bolting eyes for securing to the plinth.

The Tenderer shall submit drawings showing the dimensions and layout of all pipe-work, as well as any openings, sleeves and other builder's work required.

The Tenderer shall submit drawings showing the dimensions and layout of all pipework.

2.4.2 Air Release Valve

The automatic air release valve shall be of the double acting type, similar or equal to ARI rated at 16 Bar. The valve shall be supplied with shut-off ball valve with handwheel.

2.5 PRESSURE GAUGES

Each pumpset shall be fitted with three pressure gauges on the above ground discharge piping. These must be mounted directly onto the pipework.

The pressure gauge shall be 100 mm diameter, glycerine filled with stainless steel bodies with a pressure range, as listed below:

Discharge : 0 to 1 000 kPa

2.6 NUTS, BOLTS, READY-BAR AND PACKINGS

Nuts, bolts, washers (2 per bolt set), and ready-bar (threaded rod) shall be hot-dipped galvanised mild steel. Bolts and ready-bar lengths shall allow for at least two screw threads to be visible when tightened.

When bolts or ready-bars are cut the ends must be treated with a corrosion protective coating.

Packings (gaskets) shall be of the full-face type with pre-punched holes for bolts and/or ready-bar. The packings shall not be less than 3 mm thick (uncompressed).

2.7 SPARES

The Tenderer shall submit a complete list of all spare parts, which are not regularly kept in stock by the supplier and which the Tenderer considers to be necessary for the replacement of wearing parts.

2.8 HYDRAULIC CONTROL VALVES

2.8.1 Automatic Control Valves : General

The automatic control valves shall be of the globe type with diaphragm activated solid valve seat. The control valves shall be fitted with position indicating rods, and replaceable stainless steel valve seats. The valve bodies shall be manufactured from ductile iron, and shall be capable of handling the hydraulic and mechanical stresses associated with the installations.

The control valves shall be able to operate at near-zero flow-rate without cavitation, chattering or hunting.

Valve seals shall be resilient seal discs, centred by centring devices with little or no friction. Bottom-bearing type centring devices shall not be accepted.

Valve maintenance shall be carried out without the need to remove the valve body from the pipeline during such maintenance.

The valve design shall be such that the valve closing pace slows down during closing, in order to prevent water hammer or surges occurring.

Automatic valve operation shall be obtained by using various pilot valves in specific combinations to accomplish each required valve task.

The pump system shall be equipped with automatic hydraulic control valves, similar and equal to Bermad with the following functions.

2.8.2 **Flow-rate Control and Pressure Reducing Valve**

The flow-rate control valve shall limit the flow rate to the design flow regardless of varying pressure or demand. The control valve shall also reduce the pressure head regardless of varying pump pressure.

The discharge pressure for the respective boreholes must be reduced as follows:

Borehole	Reduced Pressure
BH 16	7 m
BH 04	7m
BH MISA	7 m
BH 1	7 m

All flow control valves shall be of the Bermad type, or similar and equal, rated at minimum 16 Bar (hydraulically operated).

2.9 **INSTALLATION**

The sum tendered for shall include for all arrangements for handling, transport, erection, adjustment, etc. as specified under PMA.1.10..

2.10 **PLANT DRAWINGS**

Drawings of all plant, equipment (in position) supplied and installed under this contract shall be submitted by the Contractor in hard copy format (3 x copies) as well as in electronic format, as specified in PMA 1.2.

2.11 **WORK TO BE DONE AT EXISTING BOREHOLES**

The following work will be done at the below mentioned existing borehole installations.

2.11.1 **New boreholes** : BH16

BH01
BH04
MISA

2.11.2

2.12 **STRAINER**

The strainers shall be of the flanged basket type rated at 16 bar. Three strainers shall be supplied in total. The flanged connections shall be ∅100 / ∅200 mm drilled to Table 1600/3. The body of the strainer shall be cast iron and the basket shall be 304 stainless steel.

The basket shall be made of wire mesh with 30 openings/inch with a wire diameter of ≈0,3 mm. The percentage open area must be less than 45%.

2.13 LOCAL DIP METER

One (1) local dip meter shall be supplied for manual water level measuring of the boreholes. The dip meter must be made out of a material that is windable onto a holding spindle. The dipmeter must be calibrated in centimetres. It must be equipped with a light and buzzer to indicate that water is reached while measuring and not need external power supply. The length supplied must be 150m.

The equipment must be supplied on a spindle that one person is able to carry and operate. It needs to be supplied with an protective bay.

The dipmeter shall be similar or equally approved to the KL010 dipmeter as supplied by Ground Water Practitioner

VICTORIA WEST– UPGRADING OF GROUNDWATER SUPPLY

TENDER NO. UB/VW/23/2022

PART C3.3: PROJECT SPECIFICATION (MECHANICAL)

3.1 Project Specification

- Section 1: General
- Section 2: Mechanical Specification

3.3 Annexes

- Data Sheet
- Commissioning Test Report

VICTORIA WEST– UPGRADING OF GROUNDWATER SUPPLY

TENDER NO. UB/VW/23/2022

C3.1 : PROJECT SPECIFICATION: SECTION 1: GENERAL

1.1 GENERAL

This contract covers the related design, supply, delivery installation, commissioning and maintenance during the defects liability period of mechanical and electrical equipment required for Three (3) new boreholes installations

DESCRIPTION OF THE SITE AND ACCESS

The project consists out of three sites outside the town of VICTORIA WEST, Northern Cape.

1.2 DETAILS OF THE CONTRACT

This contract will be executed as a nominated subcontract. The mechanical contractor under this contract shall liaise closely with the civil contractor, where civil work is done concurrently under a separate contract.

The major item of work to be carried out under this contract is:

a) Three (3) submersible multistage borehole pumps including piping, electrical switchboard, cables and automatic control for starting and stopping of the pumps.

Note: The Employer reserves the right to accept this tender in part only.

1.3 CONSTRUCTION PROGRAMME

The Contractor shall submit a programme for approval by the Engineer.

1.4 SITE FACILITIES AVAILABLE

The Contractor shall make his own arrangement for any sanitary or other facilities he may require.

1.5 STATUS

The particular specification sections forming part of this contract, have been written to cover all phases of work usually encountered in contracts of this nature and may therefore cover items of work not encountered in this particular contract. In case of any discrepancy or conflict with any part or parts of the particular specification section, these project specification amendments shall apply.

1.6 PLANT LAYOUTS

The general layout of the pump installation, piping and valves are shown on the drawings and gives the relative positioning of the various items.

The space available for the pump installation has been indicated and tenderers are required to offer the most compact layout that will fit these constraints and also ensure efficient operation. Detailed layout proposals must accompany this tender.

1.7 COMPLIANCE WITH ACT

The complete installation shall be in accordance with the Occupational Health and Safety Act (Act 85, 1993).

1.8 STANDBY

Provision shall be made for a competent workman to take charge of the complete installation, at the completion of the work, for a minimum period of one (1) week at the expense of the Contractor. The standby is for the purposes of running in the equipment, dealing with the defects that may appear and for properly instructing the Employer's staff in the care, operation and maintenance of the complete plant. This temporary charge-hand would be under direct control of the consultant for the whole of this period and shall carry out all reasonable instructions given to him by the latter.

1.9 TESTING

The Engineer shall test the electrical panels in the factory and all equipment necessary to test the performance and operation of the panels must be provided.

After completion of the installation and putting into proper operation of the plant, the contractor will be required to make suitable arrangements for the testing of the plant and equipment supplied under this contract, in the presence of the Engineer or his representative, so as to determine whether they are in compliance with the specification and where applicable, guaranteed figures submitted by the contractor. The installation must be in operation for at least a week before this handing over inspection will take place.

Before the Engineer is called to witness any testing, in the factory or on site, the contractor must test/commission the equipment/installation on his own. In the case of commissioning the results of the commissioning must be handed to the Engineer. A commissioning report form will be obtainable from the Engineer for this purpose and the Engineer must accept the results before arrangements for hand-over inspection will be made.

The contractor must make provision in his pricing for these factory tests, commissioning tests, as well as the hand-over tests.

1.10 TRAINING

Provision shall be made for a competent workman to take charge of the complete contract related installation, at the completion of the work, for a minimum period of one (1) day at the expense of the Contractor. The training is for the purposes of running in the equipment, dealing with the defects that may appear and for properly instructing the Employer’s staff in the care, operation and maintenance of the complete plant.

This training can be included under item 1.9 for STANDBY.

1.11 GUARANTEE

The Tenderer shall submit performance details of the plant, where called for in the information sheets and these details shall be taken as the guaranteed figures of the performance of the plant. Should the overall performance of the plant fail to comply with these figures the Engineer shall in terms of the Conditions of Contract have the right to reject the plant, to recover all monies paid to the Contractor under the Contract for such plant and to confiscate the surety by way of liquidated damages, whereupon the Contractor at his own expense shall remove all rejected plant when ordered to do so by the Engineer.

1.12 MAINTENANCE SERVICING

The Contractor shall provide for the maintenance and servicing of the installation as follows:

a) The Contractor shall be responsible for all maintenance and servicing of the new installation for the full twelve (12) month maintenance and guarantee period. During this period the Contractor shall make good any defects to inferior materials and workmanship and maintain all plant and equipment in perfect operating condition.

b) The Contractor shall fill out the plant log book on site in which he shall record sign and date all work carried out at each inspection as well as log all run hour ampere and pressure readings.

c) The Contractor shall allow for all expendable materials necessary for servicing the plant.

UPGRADING OF GROUNDWATER SUPPLY: VICTORIA WEST

TENDER NO:UB/VW/23/2022

C3.2: PROJECT SPECIFICATION: MECHANICAL SPECIFICATION PUMPS

2.1 **SCOPE**

This section of the contract covers the related design, supply, delivery, erection, installation, commissioning, testing and upholding during the period of maintenance of electrically driven borehole pumps, piping, valves, control and auxiliary gear, etc. with all accessories as described.

2.2 **PUMPS**

2.2.1 **Borehole pump**

Three (3) new pumpsets will be supplied in total.

The pump shall be of the submersible borehole type, GRUNDFOS or similar and equally approved. They borehole equipment (pump and motor) must be Variable Speed Drive (VSD). The borehole pump and motor will be equipped with solar supply.

Pump casings, impellers, guides shall be stainless steel, and the shaft shall be made of high-grade steel with suitable protecting sleeves. Bearings shall be waterproof with suitable lubrication. The rotating assembly shall be properly balanced so as not to give rise to excessive end thrust or alternatively, suitable thrust bearings shall be provided. All parts shall be of ample dimensions and strength, properly machined and assembled to ensure perfectly free running. The pumpset shall not have a overall diameter larger than 4” (102 mm).

The pump sets (VSD pump and VSD motors) shall be capable of doing the required duty at a nominal speed not exceeding 2 900 r.p.m. The VSD motors shall be sized to be not less than the maximum power requirement of the associated pump and impeller combination at maximum the duty point plus 15 %, with a tolerance of -2 %.

Pump curves and points of duty must be submitted with the tender.

2.3 **PUMP DUTY**

The pumps shall be sized for the worst-case scenario.

2.3.1 **Borehole Pump**

DESCRIPTION	BH 16	BH 4	BH MISA	BH 1
Duty point	3 ℓ/s @	1.8 ℓ/s	1.3 ℓ/s	1.7 ℓ/s
Design details:				
Flow	3 ℓ/s	1.8 ℓ/s	1.3 ℓ/s	1.7 ℓ/s
Static head	35 m	36 m	56 m	36 m
Friction losses	26m	80 m	26 m	46 m
Total head losses	46 m	78 m	52 m	68 m

DESCRIPTION	BH 16	BH 4	BH MISA	BH 1
Levels:				
Static water level (MBGL)	4 m	5 m	2.1 m	7 m
Dynamic water level (MBGL)	10 m	9 m	23 m	8 m
Pump inlet (MBGL)	30 m	35 m	40 m	25 m
Ground level at borehole	1292 m	1311 m	1289 m	1276 m
Reservoir inlet level	1 302 m	NA	N/A	N/A
END PRESSURE REQUIRED	**6 m**	**6 m**	**6 m**	**6 m**

Note: The casing size at the borehole must be confirmed on site before any equipment is purchased. (The inside diameter in the borehole casings must be measured).

MBGL : Meters below ground level.

MAGL : Meters above ground level.

2.4 PIPING AND PIPE FITTINGS

2.4.1 Piping

The Tenderer shall include for the supply and delivery to site and for the installation and testing of the purpose made piping as indicated according to drawing.

Above ground piping for the installations shall be mild steel to SANS 62 heavy wall or SANS 719 with 6 mm wall thickness. All under ground piping shall be covered in “Denso” tape and paste. Visible piping shall be painted after installation.

All discharge piping shall be flanged and drilled to SANS 1123, Table 1600/3.

Pipe-work for the borehole must be hot dipped galvanised and Copon epoxy-coated in three layers inside and outside to a TDFT of 350 micron after being shot-blasted to SA2½.

Piping for the borehole shall be ASHIRVAD uPVC pipes or similar and equally approved. The price shall include required pump and pipework couplings and standard wire-lock pipe jointing system.

The pricing shall include for all interconnecting fittings between pump, and steel pipework, as well as clamps for use during installation/removal of the pump and pipework.

The layout of pipe-work shall be such as to facilitate dismantling, inspection and maintenance.

The pipes must be properly supported and so arranged that all stresses created in the pipe line by static and dynamic forces, including recoil shock, will be taken up by suitable anchors. Pipes shall be supported on both sides to isolating valves, in positions indicated on the drawings.

The baseplate for borehole pump installation shall be a custom made, galvanised steel housing as shown on the plans.

It shall be constructed of minimum of 5 mm plate steel, supporting gussets for strength and have a removable side for access.

The housing shall be designed and that the pump and pipework is supported by the top coupling on tabletop surface. It shall also be suitable for the 2 x sleeves (2 x 32 mm HDPE) can protrude though the top plate for access to the instrumentation.

The housing shall include a minimum of 4 mounting/bolting eyes for securing to the plinth.

The Tenderer shall submit drawings showing the dimensions and layout of all pipe-work, as well as any openings, sleeves and other builder's work required.

The Tenderer shall submit drawings showing the dimensions and layout of all pipework.

2.4.2 **Air Release Valve**

The automatic air release valve shall be of the double acting type, similar or equal to ARI rated at 16 Bar. The valve shall be supplied with shut-off ball valve with handwheel.

2.5 PRESSURE GAUGES

Each pumpset shall be fitted with three pressure gauges on the above ground discharge piping. These must be mounted directly onto the pipework.

The pressure gauge shall be 100 mm diameter, glycerine filled with stainless steel bodies with a pressure range, as listed below:

Discharge : 0 to 1 000 kPa

2.6 NUTS, BOLTS, READY-BAR AND PACKINGS

Nuts, bolts, washers (2 per bolt set), and ready-bar (threaded rod) shall be hot-dipped galvanised mild steel. Bolts and ready-bar lengths shall allow for at least two screw threads to be visible when tightened.

When bolts or ready-bars are cut the ends must be treated with a corrosion protective coating.

Packings (gaskets) shall be of the full-face type with pre-punched holes for bolts and/or ready-bar. The packings shall not be less than 3 mm thick (uncompressed).

2.7 SPARES

The Tenderer shall submit a complete list of all spare parts, which are not regularly kept in stock by the supplier and which the Tenderer considers to be necessary for the replacement of wearing parts.

2.8 HYDRAULIC CONTROL VALVES

2.8.1 **Automatic Control Valves : General**

The automatic control valves shall be of the globe type with diaphragm activated solid valve seat. The control valves shall be fitted with position indicating rods, and replaceable stainless steel valve seats. The valve bodies shall be manufactured from ductile iron, and shall be capable of handling the hydraulic and mechanical stresses associated with the installations.

The control valves shall be able to operate at near-zero flow-rate without cavitation, chattering or hunting.

Valve seals shall be resilient seal discs, centred by centring devices with little or no friction. Bottom-bearing type centring devices shall not be accepted.

Valve maintenance shall be carried out without the need to remove the valve body from the pipeline during such maintenance.

The valve design shall be such that the valve closing pace slows down during closing, in order to prevent water hammer or surges occurring.

Automatic valve operation shall be obtained by using various pilot valves in specific combinations to accomplish each required valve task.

The pump system shall be equipped with automatic hydraulic control valves, similar and equal to Bermad with the following functions.

2.8.2 **Flow-rate Control and Pressure Reducing Valve**

The flow-rate control valve shall limit the flow rate to the design flow regardless of varying pressure or demand. The control valve shall also reduce the pressure head regardless of varying pump pressure.

The discharge pressure for the respective boreholes must be reduced as follows:

Borehole	Reduced Pressure
BH 16	7 m
BH 04	7m
BH MISA	7 m
BH 1	7 m

All flow control valves shall be of the Bermad type, or similar and equal, rated at minimum 16 Bar (hydraulically operated).

2.9 **INSTALLATION**

The sum tendered for shall include for all arrangements for handling, transport, erection, adjustment, etc. as specified under PMA.1.10..

2.10 **PLANT DRAWINGS**

Drawings of all plant, equipment (in position) supplied and installed under this contract shall be submitted by the Contractor in hard copy format (3 x copies) as well as in electronic format, as specified in PMA 1.2.

2.11 **WORK TO BE DONE AT EXISTING BOREHOLES**

The following work will be done at the below mentioned existing borehole installations.

2.11.1 **New boreholes** : BH16

BH01
BH04
MISA

2.11.2

2.12 **STRAINER**

The strainers shall be of the flanged basket type rated at 16 bar. Three strainers shall be supplied in total. The flanged connections shall be ∅100 / ∅200 mm drilled to Table 1600/3. The body of the strainer shall be cast iron and the basket shall be 304 stainless steel.

The basket shall be made of wire mesh with 30 openings/inch with a wire diameter of ≈0,3 mm. The percentage open area must be less than 45%.

2.13 LOCAL DIP METER

One (1) local dip meter shall be supplied for manual water level measuring of the boreholes. The dip meter must be made out of a material that is windable onto a holding spindle. The dipmeter must be calibrated in centimetres. It must be equipped with a light and buzzer to indicate that water is reached while measuring and not need external power supply. The length supplied must be 150m.

The equipment must be supplied on a spindle that one person is able to carry and operate. It needs to be supplied with an protective bay.

The dipmeter shall be similar or equally approved to the KL010 dipmeter as supplied by Ground Water Practitioner

UBUNTU LOCAL MUNICIPALITY

UPGRADING OF GROUNDWATER SUPPLY: VICTORIA WEST

TENDER NO: UB/VW/23/2022

C2.4 : DATA SHEETS

SECTION 1: MECHANICAL EQUIPMENT

A. DATA SHEET FOR PUMPS

1. BOREHOLE: BH16

1.1. Manufacturer .....

1.2. Place of manufacture .....

1.3. Delivery time .....weeks

1.4. Model number and type .....

1.5. Number of stages .....

1.6. Impeller diameter (mm) and material .....

1.7. Characteristics:

	Shut-off head	Best efficiency	Max. power condition	Duty point
a) Total manomatic head	.....	.....	.....	.....
b) Flow rate	.....	.....	.....	.....
c) NPSH required	.....	.....	.....	.....
d) Pump input power (kW) / motor current (A) required at …….. Volts	...../ …….	...../ …….	..... / …….	..... / …….
e) Pump efficiency	.....	.....	.....	.....

1.8. Suction diameter (if applicable) .....

1.9. Discharge diameter .....

1.10. Weight of pump with motor .....

1.11. Type of gland sealing .....

1.12. Pump speed .....

1.13. Solid size (mm) .....

PERFORMANCE CURVES

The Tenderer is required to submit signed performance curves with the tender indicating head, efficiency, kW and NPSH.

PUMP DRAWING

The Tenderer is required to submit a line drawing of the complete pump/motor unit showing all salient dimensions.

GUARANTEED CHARACTERISTICS

We guarantee that each pump set will deliver a minimum of …… ℓ/s against a total manomatric head of water of …… m and will not exceed a pump input power/motor input current of …… kW/ …….. (Ampere) at …… V …… r.p.m. in compliance with the project specification. The motor rated power exceed the calculated duty point of the driven equipment by ..... %.

Note: This data sheet must be completed fully at tender stage.

2. BOREHOLE: BH01/MISA

2.1. Manufacturer .....

2.2. Place of manufacture .....

2.3. Delivery time .....weeks

2.4. Model number and type .....

2.5. Number of stages .....

2.6. Impeller diameter (mm) and material .....

2.7. Characteristics:

	Shut-off head	Best efficiency	Max. power condition	Duty point
a) Total manomatic head	.....	.....	.....	.....
b) Flow rate	.....	.....	.....	.....
c) NPSH required	.....	.....	.....	.....
d) Pump input power (kW) / motor current (A) required at …….. Volts	...../ …….	...../ …….	..... / …….	..... / …….
e) Pump efficiency	.....	.....	.....	.....

2.8. Suction diameter (if applicable) .....

2.9. Discharge diameter .....

2.10. Weight of pump with motor .....

2.11. Type of gland sealing .....

2.12. Pump speed .....

2.13. Solid size (mm) .....

PERFORMANCE CURVES

The Tenderer is required to submit signed performance curves with the tender indicating head, efficiency, kW and NPSH.

PUMP DRAWING

The Tenderer is required to submit a line drawing of the complete pump/motor unit showing all salient dimensions.

GUARANTEED CHARACTERISTICS

We guarantee that each pump set will deliver a minimum of …… ℓ/s against a total manomatric head of water of …… m and will not exceed a pump input power/motor input current of …… kW/ …….. (Ampere) at …… V …… r.p.m. in compliance with the project specification. The motor rated power exceed the calculated duty point of the driven equipment by ..... %.

Note: This data sheet must be completed fully at tender stage.

....

SIGNATURE OF TENDERER **DATE**

B. DATA SHEET FOR MECHANICAL EQUIPMENT

1. DATA SHEET FOR PIPING

1.1. Manufacturer .....

1.2. Material of piping .....

1.3. Finish .....

1.4. Maximum working pressure .....

1.5. Test pressure .....

1.6. Internal diameter .....

1.7. Couplings .....

2. DATA SHEET FOR BUCKET TYPE STRAINER

2.1. Manufacturer .....

2.2. Make and model number .....

2.3. Material of body .....

2.4. Material of strainer .....

2.5. Hole diameters .....

2.6. Maximum working pressure .....

2.7. Nominal diameter .....

2.8. Couplings .....

3. DATA SHEET FOR AIR RELEASE VALVE

3.1. Manufacturer .....

3.2. Make and model number .....

3.3. Material:

Body .....

Float .....

3.4. Accessories .....

3.5. Size .....

3.6. Maximum working pressure .....

....

SIGNATURE OF TENDERER **DATE**

4. DATA SHEET FOR HYDRAULIC CONTROL VALVES

		Flow Control & Pressure Reducing Valve
4.1.	Manufacturer	.....
4.2.	Place of manufacture	.....
4.3.	Model	.....
4.4.	Size (mm)	.....
4.5.	Minimum continuous flow rate (ℓ/s)	.....
4.6.	Maximum continuous flow rate (ℓ/s)	.....
4.7.	Pressure drop at maximum flow rate with valve 100 % and 50 % open (m)	.....
4.8.	Test pressure	.....
4.9.	Materials:	
	Body	.....
	Body coating	.....
	Valve seat	.....
	Valve seal	.....
4.10.	Single/Double chamber	.....
4.11.	Type and size of control line filter/strainer	.....
4.12.	Method of operation	.....

5. DATA SHEET FOR LOCAL DIP METER

5.1.	Manufacturer	.....
5.2.	Supplier	.....
5.3.	Material	.....
5.4.	Calibration	.....
5.5.	Way of water notification	

....

SIGNATURE OF TENDERER **DATE**

SECTION 2: ELECTRICAL EQUIPMENT

A: DATA SHEET FOR ELECTRICAL MOTORS

1. BOREHOLE 16

1.1	Manufacturer	.....
1.2	Place of manufacture	.....
1.3	Class of insulation	.....
1.4	Type of winding over-temperature protection device	.....
1.5	Type of motor	.....
1.6	Rated output (kW)	.....
1.7	Rated full load current	.....
1.8	Voltage	.....
1.9	Power factor at full load	.....
1.10	Power factor at $^3/_4$ load	.....
1.11	High efficiency motor	YES / NO
	a) Efficiency at full load	.....
	b) Efficiency at $^3/_4$ load	.....
1.12	Protection class	.....
1.13	Full load speed	.....
1.14	Maximum outer diameter	.....
1.15	Additional information	.....

2. BOREHOLE MISA & BH1

2.1	Manufacturer	.....
2.2	Place of manufacture	.....
2.3	Class of insulation	.....
2.4	Type of winding over-temperature protection device	.....
2.5	Type of motor	.....
2.6	Rated output (kW)	.....
2.7	Rated full load current	.....
2.8	Voltage	.....
2.9	Power factor at full load	.....
2.10	Power factor at $^3/_4$ load	.....
2.11	High efficiency motor	YES / NO
	c) Efficiency at full load	.....
	d) Efficiency at $^3/_4$ load	.....
2.12	Protection class	.....
2.13	Full load speed	.....
2.14	Maximum outer diameter	.....
2.15	Additional information	.....

Note: This datasheet must be completed fully at tender stage

....

SIGNATURE OF TENDERER **DATE**

B: DATA SHEET FOR CONTROL EQUIPMENT

1. LEVEL PRESSURE SENSORS

1.1 Manufacturer .....

1.2 Place of manufacture .....

1.3 Model number / Type description .....

1.4 Is brochure included YES/NO

1.5 Additional information:

.....

.....

.....

2. BOREHOLE ELECTRODES

1.6 Manufacturer .....

1.7 Place of manufacture .....

1.8 Model number / Type description .....

1.9 Is brochure included YES/NO

1.10 Additional information:

.....

.....

.....

2. FLOAT LEVEL SWITCHES

2.1 Manufacturer .....

2.2 Place of manufacture .....

2.3 Model number / Type description .....

2.4 Is brochure included YES/NO

2.5 Additional information:

.....

.....

.....

3. MECHANICAL FLOW METERS

3.1 Manufacturer .....

3.2 Place of manufacture .....

3.3 Model number / Type description .....

3.4 Is brochure included YES/NO

3.5 Additional information:

.....

.....

.....

4. LIMIT SWITCHES

4.1 Manufacturer .....

4.2 Place of manufacture .....

4.3 Model number / Type description .....

4.4 Is brochure included YES/NO

4.5 Additional information:

.....

.....

.....

....

SIGNATURE OF TENDERER **DATE**

C: DATA SHEET FOR LV MCC's AND SWITCHGEAR

1. SOURCE

EQUIPMENT	NAME OF MANUFACTURER	PLACE OF MANUFACTURE
MCC		
Circuit breakers		
Non electronic starters		
Electronic starters		

2. STARTER

STARTER	TYPE	RATING	DUTY	OVERLOAD
Borehole 16				
MISA borehole				
Borehole 01				

3. MCC DIMENSION (l x w x h)

3.1 BOREHOLE 16: …….....……

3.2 MISA Borehole: …….....……

3.3 BOREHOLE 01: …….....……

4. OHS ACT : SANS 10142-1 COMPLIANCE

Refer to C3.2 Standard Specification PMA Clause PMA 4.2.1

(Note the relevant question box must be marked with an "X")

4.1 Assemblies ≤ 10 kA (SANS 1973-3)

a) Will switchboards be in compliance

Yes		No	

b) Name of switchboard manufacturer

_____

4.2 Assemblies >10 kA (SANS 1973-1)

NOT APPLICABLE

a) Will switchboards be in compliance

Yes		No	

b) State basis of MCC offered

TTA		MTA		Other*	

4.2.1 Name of steelwork and busbar assembly manufacturer

.....

.....

4.2.2 Name of switchboard assembly populator

.....

.....

4.2.3	If (3) and (4) are different entities, state whether the entity under (3) will certify the completed populated switchboard under (4) as compliant with SANS 1973-1.	Yes		No	

4.3	Has the requirements of the abovementioned Clause PMA 4.2.1 in terms of the OHS Act been noted and is compliance confirmed.	Yes		No	

(Note: this is a statement of legal compliance)

.....
NAME OF TENDERER

....
SIGNATURE OF TENDERER **DATE**

(Who by his signature verifies the correctness of the above and accepts responsibility to future compliance)

DATA SHEET FOR ELECTRICAL CABLES

		Manufacturer	Type
1.	MCC Supply	……	……
2.	Borehole pump Motor cables	……	……
3.	Borehole Electrodes	……	……
4.	Float switches	……	……
5.	Flow meter opto sensors	……	……
6.	Pressure sensor	……	……
7.	Swing check limit switch	……	……

8. Any other cable deemed necessary:

.....

.....

.....

.....

....

SIGNATURE OF TENDERER **DATE**

D: DATA SHEET FOR SCADA

1. Name of supplier .....
2. Telemetry equipment type and model .....
3. Radio
   a) Manufacturer .....
   b) Model .....
   c) Type .....
4. SCADA package
   a) Computer details .....
   b) SCADA package type .....
   c) Software tags provided .....
   d) Spare I/O capacity after implementation .....
5. Communication verified YES / NO
6. Other information:

.....

.....

.....

.....

DATA SHEET FOR RECOMMENDED SPARES

The Tenderer must fill in on this sheet any spares, which he considers the Employer, should hold.

DESCRIPTION	PART NO.	NUMBER REQUIRED IN STOCK	UNIT PRICE	AMOUNT	
				R	c
TOTAL					

.....
SIGNATURE OF TENDERER

.....
DATE

UBUNTU LOCAL MUNICIPALITY

UPGRADING OF GROUNDWATER SUPPLY: VICTORIA WEST

TENDER NO.: UB/VW/23/2022

C3.3.3 : COMMISSIONING TEST REPORT

UBUNTU LOCAL MUNICIPALITY

UPGRADING OF GROUNDWATER SUPPLY: VICTORIA WEST

TENDER NO.: UB/VW/23/2022

COMMISSIONING TEST REPORT
(COPIES AVAILABLE FROM THE ENGINEER)

CONTRACT NO. : **301824** **DATE :** .....

DESCRIPTION : **UPGRADING OF THE GROUNDWATER SUPPL : SUPPLY AND INSTALLATION OF MECHANICAL AND ELECTRICAL PUMPING EQUIPMENT**

				REMARKS
1.	**GENERAL**			
1.1	**PANEL INSTALLATION CORRECT**	**Y**	**N**	
1.2	**CABLE CORRECTLY GLANDED**	**Y**	**N**	
1.3	**SWITCHBOARD EARTHED**	**Y**	**N**	
1.4	**VOLTMETER CORRECT**	**Y**	**N**	
1.5	**AMPERE METERS CORRECT**	**Y**	**N**	
1.6	**MOTORS NUMBERED ON BASES**	**Y**	**N**	
1.7	**CABLING TO EQUIPMENT CORRECT**	**Y**	**N**	
1.8	**SWITCHBOARD CONTROL CORRECT**	**Y**	**N**	

.....

.....

.....

.....

.....

2. **MOTORS**

		1	2	3
2.1	**EQUIPMENT**			
	1.			
	2.			
	3.			
2.2	**MOTOR DATA**			
2.2.1	Make			
2.2.2	Frame			
2.2.3	Speed			
2.2.4	Insulation			
2.2.5	Rating			
	a) kW			
	b) PF			
	c) Current (A)			
	d) Efficiency			
2.3	**CURRENT MEASURED (A)**			
	a) Rph			
	b) Wph			
	c) Bph			
2.4	**VOLTAGE**			
	a) R-N/R-W	/	/	/
	b) W-N/W-B	/	/	/
	c) B-N/B-R	/	/	/
2.5	**EARTH LEAKAGE TRIP VALUE**			
2.6	**OVERLOAD SETTING**			
2.7	**INSULATION TO EARTH (STAR DELTA OR PHASES DISCONNECTED)**			
	a) U1-E			
	b) V1-E			
	c) W1-E			

		1	2	3
2.8	**INSULATION BETWEEN WINDINGS (WINDINGS DISCONNECTED)**			
	a) U1-V1			
	b) U1-W1			
	c) V1-W1			
2.9	**INSTALLATION**			
2.9.1	Motor cable insulation (mΩ)			
	a) R-W			
	b) R-B			
	c) B-W			
	d) R-G/R-N	/	/	/
	e) W-G/W-N	/	/	/
	f) B-G/B-N	/	/	/
	Continuity **(Ω)**			

3. PUMPS

3.1	**DATA**	**UNIT**	**PUMP 1**	**PUMP 2**	**PUMP 3**
	a) Make and model no.				
	b) Type of pump				
	c) Impeller size				
	d) Speed	r.p.m.			
	e) Flow reading:				
	at duty point	m^3/hr			
	at minimum head	m^3/hr			
	f) Discharge pressure reading				
	at duty point	kPa			
	at minimum head	kPa			
	at shut-off head	kPa			
	g) Suction pressure reading				
	at duty point	kPa			
	at minimum head	kPa			

3.1 DATA (continues/….)	UNIT	PUMP 1	PUMP 2	PUMP 3
at shut-off head	kPa			
h) Calculated discharge at duty point	m^3/hr			
i) Total head	mg			
j) Water power	kW			
k) Shaft power	kW			
l) Corrections for speed				
m) Discharge	m^3/hr			
n) Total head	m			
o) Water power	kW			
p) Shaft power	kW			
q) Pump efficiency	%			
r) Test certificate no.				

Test curves must include from 0 to 110 % of motor capacity.

3.2 **REMARKS**

.....

.....

.....

4. COMMISSIONING DATA

4.1 Borehole depth from ground surface to pump inlet :

.....

4.2 Depth from ground surface to borehole pressure sensor :

.....

4.3 Depth from ground surface to electrode sensor :

.....

4.4 Borehole low level from pressure sensor (in metres above pump)

.....

4.5 Borehole reset level from pressure sensor (in metres above pump)

.....

4.6 Depth from Ultrasonic Sensor bottom to reservoir start demand :

.....

4.7 Phase failure relay settings

% Over voltage .....

% Under voltage .....

Time delay .....

5. **CERTIFICATE OF COMPLIANCE SUBMITTED TO SUPPLY AUTHORITY**

Yes	No

I certify that the installation has been commissioned and tested by me to conform to the specification.

SIGNATURE : .....

NAME (In print) : .....

CAPACITY : .....

NAME (In Print) : .....

COMPANY : .....

DATE : .....

FACTORY TEST REPORT : SWITCHBOARD

CONTRACT NO. : **DATE :** .....

DESCRIPTION : **UPGRADING OF THE GROUNDWATER SUPPLY : SUPPLY AND INSTALLATION OF MECHANICAL AND ELECTRICAL PUMPING EQUIPMENT**

SWITCHBOARD REFERENCE : .....

SWITCHBOARD MANUFACTURER : .....

				REMARKS
1.	**CONSTRUCTION**			
1.1	Paint work correct	**Y**	**N**	
1.2	Switchboard material : _____			
1.3	I.P. Protection class : _____			
1.4	Door seal(s) continuous	**Y**	**N**	
1.5	Switchboard fault rating (kA) : _____			
1.6	Earth bar suitable	**Y**	**N**	
1.7	Wiring neat and numbered	**Y**	**N**	
1.8	Wiring lumes fixed to structure (no adhesive)	**Y**	**N**	
1.9	Gland plate position correct	**Y**	**N**	
1.10	Sewage panel bottom closed off	**Y**	**N**	
1.11	Circuit breaker handles lockable	**Y**	**N**	
1.12	Instrumentation correct			

VOLT		AMPERE		HOUR	
Y	**N**	**Y**	**N**	**Y**	**N**

2. **STARTERS**

2.1

	EQUIPMENT	STARTER TYPE	RATING	O/L RANGE
a)				
b)				
c)				
c)				
d)				
e)				

3. **THERMISTORS FITTED**

3.1

	EQUIPMENT	YES	NO
a)			
b)			
c)			
c)			
d)			
e)			

4. **EARTH LEAKAGE FITTED**

4.1

	EQUIPMENT	YES	NO
a)			
b)			
c)			
c)			
d)			

5. **CONTROL CORRECT**

YES	NO

.....

.....

.....

SIGNATURE : ..... **NAME (In print)** : .....

CAPACITY : ..... **NAME (In Print)** : .....

DATE : .....

FACTORY TEST REPORT : PUMPS

CONTRACT NO. : **301824** **DATE :** .....

DESCRIPTION : **UPGRADING OF THE GROUNDWATER SUPPL : SUPPLY AND INSTALLATION OF MECHANICAL AND ELECTRICAL PUMPING EQUIPMENT**

1. **DATA**	**UNIT**	**PUMP 1**	**PUMP 2**	**PUMP 3**
a) Make and model no.				
b) Type of pump				
c) Impeller size				
d) Speed	r.p.m.			
e) Flow reading:				
at duty point	m^3/hr			
at minimum head	m^3/hr			
f) Discharge pressure reading				
at duty point	kPa			
at minimum head	kPa			
at shut-off head	kPa			
g) Suction pressure reading				
at duty point	kPa			
at minimum head	kPa			
at shut-off head	kPa			
h) Calculated discharge at duty point	m^3/hr			
i) Total head	mg			
j) Water power	kW			
k) Shaft power	kW			
l) Corrections for speed				
m) Discharge	m^3/hr			
n) Total head	m			
o) Water power	kW			
p) Shaft power	Kw			
q) Pump efficiency	%			
r) Test certificate no.				

Test curves must include from 0 to 110 % of motor capacity.

C3.4 : CONSTRUCTION MANAGEMENT

C3.4 MANAGEMENT OF THE WORKS

C3.4.1 Applicable SANS and SABS standards

The provisions of these SANS 1200 take precedent over the provisions of any part of SANS 2001 that is applicable to the contract. The variations and additions to these specifications are described in the section "Applicable SANS 1200 standardised specifications."

The SANS 1200 Standardised Specifications for civil engineering construction applicable to this contract are stated in Section C3 : Construction.

C3.4.2 Particular / Generic specifications

The following particular and generic specifications are applicable to this contract :

i) Environmental Management Plan

ii) Occupational Health and Safety Specifications

C3.4.3 Planning and programming

It is a prerequisite of this contract that minimal disruption of the public is ensured during construction. The Contractor shall draw up his programme to ensure that no delays are experienced on contract.

The Contractor shall indicate in his construction programme the number of construction teams he envisage will be required including the date when each team will start, chainage where each team will commence from and the estimated period for which each team will be engaged.

Construction methods must be of such nature that no property or life on site or adjacent to the works is endangered. The Employer accepts no responsibility for work that is done outside the site boundaries without the Engineer's approval.

All open excavations on site must be clearly demarcated and safeguarded before it is left overnight, during weekends and on public holidays. All excavations shall be backfilled and finished to the complete satisfaction of the Engineer.

The Contractor shall program separately for the detection, exposing and modification of existing services at the start of the contract at least fourteen (14) days prior to the proposed crossings. The position and levels thereof must be recorded and forwarded to the Engineer so that any adjustments to the design can be made if necessary. No extension of time arising out of any delay in completing this work will be considered.

The Contractor shall submit within two (2) weeks after site-handover to the Engineer an updated construction program indicating all construction activities, phasing, handing over of sections, resources, timelines, monthly expenditure and critical path with specific reference to criteria in C3.5.1 for the duration of the construction period indicated for approval. The Contractor will not be allowed to commence with any work before this program has been agreed upon and approved by the Engineer.

The Contractor himself is responsible for liaison and the necessary arrangements with property owners, relevant local and road authorities, Eskom, Telkom and Neotel in respect of service crossings and the finalisation and approval of the works program.

The compilation of the construction program and any amendments thereto during the course of construction shall be at the cost of the Contractor and shall not be measured elsewhere in this contract.

The Contractor shall record progress against the program. The Contractor shall draw the Engineer's attention immediately to any activities that fall behind program and shall inform the Engineer how he proposes to get back on program. Progress meetings shall be held monthly on site. Failure to comply with these requirements will entitle the Engineer to use a programme based on his own assumptions for the purpose of evaluating claims for extension of time or additional payments.

The Contractor himself is responsible for liaison with property owners with regards to the programming of construction activities through private properties and the crossing of access ways to properties at least fourteen (14) days before such construction activities commence. No additional payment will be made in this regard.

The Contractor shall be responsible to inform all property and business owners by written confirmation of any road closures and the arrangements must be completed at least seven (7) days in advance. No additional payment will be made in this regard and it shall be deemed to be covered by the relevant items.

However both vehicle and pedestrian access to businesses, commercial properties and municipal and state institutions i.e. SAPS buildings, provincial clinics, traffic departments and schools must be provided at all times and arrangements for temporarily alternative parking must be discussed and arranged with the relevant businesses or institutions.

Sufficient photos of existing structures, walls and areas that have to be crossed must be taken by the Contractor and handed over to the Engineer before such operations commence. No payment will be made in this regard and it shall be deemed to be covered in the preliminary and general items.

A Mechanical and electrical contractor will be on site during the contract period. The Contractor must note that no additional payment is applicable for re-programming of the works and/or any delays that may be caused by bad co-ordination, unless otherwise agreed by the Engineer. All costs associated with liaison with the Mechanical and electrical contractor and the accommodation of the main contractor's activities on the site must be allowed for in the schedule of quantities.

Existing services shall remain in operation throughout the duration of the contract.

C3.4.4 Methods and procedures

C3.4.4.1 Maintenance of accesses and streets

The operation of construction vehicles on existing roads or streets, or on streets which have been completed to the level of sub-base or base or bituminous surface treatment, shall be limited to traffic with an axle load not exceeding that allowed by the Road Traffic Ordinance of the authority concerned, or any amendment thereof. Hauling is strictly forbidden on sections of streets that have been completed as described above. The Contractor shall make use of temporary haul roads, or where not practically possible, programme his work in such a manner that the haulage of materials shall be restricted to that required for the particular section of street. No additional payment shall be made for the use of temporary haul roads and all relevant costs shall be deemed to be covered by the appropriate rates.

The Contractor must note that no additional payment will be made for the construction of temporary access roads to the construction site, borrow areas or to the spoil sites, except for payment made under payment item A 8.3.2.2 of SANS 1200 A.

If the Contractor does make use of existing streets for the hauling of materials to or from the site, he shall be held responsible to clear any spillage caused by his activities on or near the roads by whatever means necessary, within one (1) day after such spillage has occurred. No additional payment will be made for the clearance of spillage and all relevant costs will be deemed to be covered under the relevant items.

C3.4.4.2 Blasting operation

Any blasting required shall be carried out by a competent, registered blaster. All permits required to purchase, transport, use and dispose of unused, blasting material shall be obtained and copies given to the Engineer before any blasting may take place. The commander of the local South African Police Services (SAPS) shall be informed of the time and date that blasting operations will take place at least 6 hours before blasting.

No blasting operations may take place on weekends or holidays or after 17:00 on week days.

The Contractor shall ensure that sufficient suitable cover material, to the satisfaction of the blaster, is available and in place before a blast is initiated.

C3.4.4.3 Normal working hours

Normal working hours shall be between 07:00 and 17:00 on weekdays from Mondays to Fridays and between 07:00 and 13:00 on Saturdays, should the Contractor choose to work on Saturdays, excluding Public holidays.

C3.4.4.4 Quality plans and control

The Contractor shall have a well-documented Quality Assurance system depicting his approach to guarantee quality control and the procedures for preventative and corrective actions in order to ensure compliance with the specified standards and requirements of this contract.

The Contractor is required to carry out his own control testing, but if he so wishes, and agrees to abide by the results of the Engineer's check test, he may dispense with his own tests. However, should the Contractor wish to use the Engineer's testing facilities, he will be charged for the various tests at the rates ruling at the time.

Any additional tests requested by the Contractor or any retests required, due to failure of the initial tests, will be charged to the Contractor at the rates ruling at the time.

C3.4.4.5 Interference with Municipal staff and operations

N/A.

C3.4.4.6 Access for other Contractors

The Contractor shall provide reasonable access to other Contractors carrying out work on the site from time to time, as and when such access is required. The Contractor is entitled to request reasonable notification of at least 24 hrs before access by others is required.

C3.4.4.7 Giving notice of work to be covered up

The Contractor shall give the Engineer reasonable time to accommodate examinations in his program, in which case times for inspections can be agreed on. Requests for examination of work shall be made with an inspection request form 72 hrs before the examination is required.

If the Engineer attends with the purpose of examining any part or materials of the works at the time and date as agreed upon with the Contractor, and it is found that the works or materials are not yet ready for inspection, the Contractor shall be responsible for the costs of such a visit by the Engineer.

C3.4.4.8 Cost of test specimens and tests

It is deemed that the Contractor has made provision in his tender for all such services and tests that are required from him. It is the duty of the Contractor, at his own cost and by means of the necessary tests, to prove to the Engineer that the works and compaction where prescribed, comply with the specification.

C3.4.5 Sequence of the works

Sequencing of the works shall be agreed to between the Contractor, the Engineer and the client.

C3.4.6 Quality plans and control (Testing)

Refer SANS 1200 A : General

C3.4.7 Environmental Management Plan

C3.4.7.1 Demarcation of the site

For the purpose of the EMP, the site shall be divided into two areas identified by the Engineer and the Contractor:

(i) The construction camp comprising all buildings, hostels, offices, lay down yards, vehicle wash areas, fuel and material storage areas, batching areas and other infrastructure that is required for the running of the job.

(ii) The working area in which construction activity is permitted to take place. No infrastructure, permanent lay down or storage areas shall be established in this working area unless specified in the project specification or prior approval is obtained from the Engineer.

C3.4.7.2 Construction camp

The Contractor shall provide the Engineer with a plan showing the positions of all buildings, yards, vehicle wash areas, batching areas and other infrastructure for approval by the Engineer at least ten (10) days prior to the commencement date. The construction camp shall be planned in such a way so as to affect as small an area as practically possible. The Engineer shall approve the location and layout of the construction camp prior to establishment.

C3.4.7.3 Fencing of the site

If a temporary fence is required, the Contractor shall erect and maintain such a fence (demarcating the boundary of the working area, construction camp and access roads) to the satisfaction of the Engineer. The erection of this fence shall be one of the first tasks undertaken by the Contractor after the commencement date. The boundaries between the construction camp area and the working area within the site shall also be fenced. The Contractor shall ensure that the erection of the fencing causes minimal disturbance to flora, fauna, natural, historical and cultural features. A method statement shall be submitted to the Engineer prior to erection to ensure proper positioning of the fence.

All material left over from fencing operations shall be collected after the fence has been erected and removed from site. Fences shall not be moved or removed without the written consent of the Engineer. The Contractor throughout the construction period shall maintain fences.

C3.4.7.4 Workshops

Any workshops shall be located inside the demarcated construction camp area. The exact location and design of the workshop shall be as approved by the Engineer prior to establishment. The workshop shall have a smooth impermeable (concrete) floor. The floor shall be bunded and

sloped towards an oil trap or sump to contain any spillages of substances (e.g. oil). When servicing equipment, drip trays shall be used to collect the waste oil and other lubricants. All waste material shall be disposed of in accordance with national, regional and local laws, regulations and by-laws. This waste material shall be regularly removed off site and disposed of at an approved waste site.

C3.4.7.5 Eating areas

The Contractor's employees shall eat in the designated eating area indicated on the Contractor's drawing of the construction camp that has been approved by the Engineer. No changes to the eating area shall be made without the approval of the Engineer. The Contractor shall provide shade and adequate scavenger-proof and weatherproof refuse bins in this area. Any cooking on site shall only be undertaken in the eating area and be done on well maintained gas cookers with fire extinguishers present. No cooking shall be done anywhere else on site and no fires are permitted.

C3.4.7.6 Watchmen

The Contractor shall ensure that a watchman is present on site during all non-working hours, including public holidays unless otherwise agreed with the Engineer to ensure the safety of sensitive areas.

C3.4.7.7 Ablution facilities

The exact location of the toilets shall be as approved by the Engineer. The Contractor shall provide toilets and shall be responsible for their maintenance and servicing on a daily basis. The contractor shall ensure that no spillage occurs when the toilets are cleaned or emptied. Burial of waste from toilets on site is strictly prohibited. The toilets shall be maintained in a clean state. Performing ablutions anywhere other than in toilets is strictly prohibited. Leaking toilets shall be repaired immediately or removed from site.

C3.4.7.8 Solid waste collection areas

"Solid waste" refers to all solid waste, including construction debris, chemical waste, excess cement/concrete, wrapping materials, timber, tins and cans, drums, wire, nails, food and domestic waste (e.g. plastic packets and wrappers).

The Contractor shall set up a waste control and removal system. The Contractor shall submit a method statement for waste control and removal to the Engineer for approval prior to commencement. Bins shall be closed, weatherproof and scavenger-proof.

Waste shall be collected from these bins on a daily basis and shall be stored in a central collection area prior to removal off-site. This central collection area shall have appropriate storage containers (closed and weatherproof) bunded and lined with plastic or concrete. The waste from this central collection area shall be disposed of off-site at an approved waste site. Waste shall be removed from site on a regular basis as approved by the Engineer. Waste shall not be burnt or buried on site or in the surrounding area. Where possible, appropriate material shall be reused or recycled.

C3.4.7.9 Wastewater

Water shall be used sparingly on site and where possible wastewater shall be recycled. A wastewater management plan shall be submitted to the Engineer for approval 10 days prior to commencement date. This management plan shall detail the expected extent of contamination of each wastewater stream and how the Contractor plans to deal with each wastewater stream.

C3.4.7.10 Fuel storage areas

Fuels required for use during construction shall be stored in a depot at the construction camp at a location as agreed upon by the Engineer. The Contractor shall ensure that all liquid fuels (petrol and diesel) are stored in tanks with lids, which are kept firmly shut. The tanks shall be situated

on a smooth impermeable (plastic or concrete) base with an earth bund. The impermeable lining shall extend to the crest of the bund and the volume inside the bund shall be 1,5 x the total capacity of the storage tanks. The bunded area shall be emptied of water following rainfall events. The floor of the bund shall be sloped towards an oil trap or sump to enable any spilled fuel and / or fuel-soaked water to be removed.

The Contractor shall keep fuel under lock and key at all times.

C3.4.7.11 Concrete batching area

Cement and concrete are regarded as hazardous to the environment due to the high pH of the material and the chemicals it contains.

The Contractor shall submit a method statement for mixing of concrete for approval by the Engineer indicating where the mixing will take place and the methods to ensure that waste water and materials are contained in the batching area and disposed of correctly. Concrete shall not be mixed directly on the ground.

C3.4.7.12 Equipment maintenance and storage

All vehicles and equipment shall be kept in good working order and serviced regularly. Leaking equipment shall be repaired immediately or removed from the site. Where possible, all maintenance of equipment and vehicles shall be performed in the workshop. If it is necessary to do maintenance outside of the workshop area, the Contractor shall obtain agreement from the Engineer prior to commencing activities.

The Contractor shall demarcate an area in which equipment and vehicles may be stored. The location of this area shall be as approved by the Engineer. The Contractor shall take measures to ensure that there is no pollution of this storage area by leaks or drips.

C3.4.7.13 Materials handling, use and storage

The Contractor is responsible for ensuring that any material delivery drivers are informed of all procedures and restrictions (e.g. which access roads to use, “no go” areas, speed limits, dust control, etc) required to comply with the EMP before they arrive at site and off load any materials. The Contractor shall ensure that the delivery drivers are supervised during off-loading by someone with an adequate understanding of the requirements of the EMP, so as to ensure that all relevant requirements of the EMP are followed.

Hazardous Substances

The Contractor shall comply with all relevant national, regional and local legislation with regard to the transport, use and disposal of hazardous materials.

The Contractor shall provide the Engineer with a list of all hazardous materials to be used on site, together with the storage, handling and disposal procedures of the materials. This information shall be available to all personnel on site.

The location of the hazardous material store shall be within the demarcated construction camp area. The location and design of the store within this area shall be approved by the Engineer prior to establishment.

Fuel (Petrol and Diesel) and Oil

Where possible, the Contractor shall ensure the refuelling of vehicles takes place only at the fuel storage area in the construction camp. Where this is not possible, the Contractor shall notify the Engineer to get his approval of the refuelling method to be used. The surface under the refuelling area shall be protected against pollution to the satisfaction of the Engineer prior to any refuelling activities. All equipment that leaks shall be repaired immediately or removed from the site. Refuelling shall be carried out by means of pumps, rather than funnels.

C3.4.7.14 Emergency procedures

The Contractor shall ensure that emergency procedures for the following situations are submitted for approval to the Engineer prior to establishment of the site.

Fire

The Contractor shall advise the relevant authority of a fire as soon as one starts and shall not wait until he can no longer control it. The Contractor shall ensure that his staff and the staff of Subcontractors are aware of the procedure to be followed in the event of a fire.

Accidental leaks and spillages

The Contractor shall ensure that his staff and the staff of Subcontractors are aware of the procedure to be followed for dealing with spills and leaks, which will include notifying the Engineer and relevant authorities. The Contractor shall also ensure that the necessary materials and equipment for dealing with spills and leaks are present on site at all times. The clean up of spills and any damage caused by the spill or leak shall be for the Contractor's account. The Contractor shall submit a method statement for management of accidental leaks and spillage's of any liquid material to the Engineer for approval.

C3.4.7.15 Care of surrounding areas

The Contractor shall ensure that no contamination of or damage to the surrounding areas or watercourses shall occur as a result of any of his activities during construction.

Care shall be taken to ensure no accidental spillage or leakage occurs whilst temporary bypass facilities are in use. Should any spillage or leakage occur the Contractor shall immediately stop his operations and clean up the spillage. He shall then rectify the cause of the spillage or leakage before proceeding further to ensure that no further spillages occur.

The clean up of spillage and any damage caused by the spillage or leakage shall be for the Contractor's account. The Contractor shall submit a method statement for management of accidental leaks and spillages of any sewage to the Engineer for approval.

The Contractor shall ensure that no pollution of the surrounding areas occurs due to wind-blown or other litter emanating from the site or from his activities during construction. No fires are permitted, neither is the cutting down of or any damage to trees and other vegetation outside of the demarcated site.

C3.4.8 Other Contractors on site

A mechanical / electrical contractor will be on site during the contract period, who will be working on the instalment of certain mechanical components of the new sewer pump station. The contractor responsible for delaying other contractors shall be liable for all costs associated with the delay.

Programming and liaison in this regard must be taken into account.

C3.4.9 Format of communications

All communication regarding the contract shall be channelled through the Engineer and/or his duly authorised representative.

C3.4.10 Key personnel

The contractor shall furnish satisfactory evidence that they dispose of sufficient staff and workmen with the necessary experience in work of a similar nature as that described in this document. For this purpose the contractor shall duly complete a personnel schedule and past experience.

C3.4.11 Management meeting

Monthly site meetings will take place at the site office of the Contractor at dates and time to be communicated at the award of the contract. The Employer, Engineer, Contractor and Project Steering Committee will attend the monthly site meetings. The Engineer will act as the chair for the monthly site meetings. Other planning meetings between the Contractor's personnel and the Engineer's Representative can take place on a fortnightly basis or as required in terms of the contract progress.

C3.4.12 Daily records

The Contractor will be required to keep a daily record of the site activities (including plant, personnel, site and weather conditions) in the Site Diary which will be inspected during each management meeting and when the Engineer or Employer visits the site.

C3.4.13 Payment certificates

Payment on this contract will be made in accordance with Contract clauses. The Contractor and the Engineer's Representative shall compile and agree on the quantity of work certified for payment and submit the payment certificate to the Engineer 7 days before the monthly site meeting. The Engineer will draw up the payment certificate to be certified at the monthly site meeting by the Engineer and the Employer. Payment certificates will only be certified at the site meeting if the Engineer and Employer are in agreement as to work certified, contractual obligations fulfilled by the contractor, etc. following a site inspection on the day of the site meeting. Payment certificates will be certified by the Engineer and Employer should there be an agreement as to the issues previous mentioned or the payment certificate will be edited.

No retention money will be certified for payment unless the list setting out the work to be completed to justify the issue of the Certificate of Completion, has been fully complied with.

The quantities in the Bill of Quantities are provisional only and do not necessarily represent the actual and final amount of work to be done. Unless otherwise stated, items will be measured nett in accordance with the drawings and no allowance will be made for waste.

The Contract amount for the complete contract shall be computed from the actual measured quantities of authorised work done to the satisfaction of the Engineer, valued at prices tendered against the respective items in the Bill of Quantities.

VICTORIA WEST– UPGRADING OF GROUNDWATER SUPPLY

TENDER NO. UB/VW/23/2022

C3.5 - OCCUPATIONAL HEALTH AND SAFETY

VICTORIA WEST– UPGRADING OF GROUNDWATER SUPPLY

TENDER NO. UB/VW/23/2022

OHS CONTRACTOR SPECIFICATION

INDEX **PAGE**

1. SCOPE

This Specification is intended for all Service Providers and Contractors

2. OBJECTIVE

- To ensure that Service Providers and Contractors comply with the requirements of the Occupational Health and Safety Act No. 85 of 1993 and the Regulations thereto including any relevant standards and SABS codes of practice that may apply.

- To minimise and eliminate contractor's health and safety risks.

- To ensure that contractors submitting tenders make provision for the cost of health and safety measures to be implemented during the duration of the contract / during the construction process.

3. DEFINITIONS

Client means any person for whom construction work is performed.

Contractor (also referred as Mandatary), including a labour-only contractor, who carries out a trade, business or other undertaking (whether for profit or not) in connection with which he or she:

(a) carries out or undertakes to carry out or manages construction work; or

(b) arranges for any person at work under his control (including an employee of his, where he is the employer) to carry out or manage construction work; or

(c) provides a person or persons to perform work for a client

Construction work means any work in connection with

(a) the erection, maintenance, alteration, renovation, repair, demolition or dismantling of or addition to a building or any similar structure;

(b) the installation, erection, dismantling or maintenance of a fixed plant where such work includes the risk of a person falling;

(c) the construction, maintenance, demolition or dismantling of any bridge, dam, canal, road, railway, runway, sewer or water reticulation system or any similar civil engineering structure; or

(d) the moving of earth, clearing of land, the making of an excavation, piling, or similar type of work.

(e) Any work in addition to the above which by agreement between the principal and the contractor may be agreed to be construction work, or any work which may be described as construction work in terms of the Construction Regulations to the OHS Act GN 1010 of the 18th July 2003.

Competent person means any person having the knowledge, training, experience and qualifications specific to the work or task being performed. Qualifications and training must be inline with the South African Qualification Authority Act No. 58 of 1995.

Designer means a person who prepares a design; arranges for any person at work under his control(including an employee of his, where he is the employer) to prepare a design; an architect or engineer contributing to, or having overall responsibility for the design; building services engineer designing details for fixed plant; surveyor specifying articles or drawing up specifications; contractor carrying out design work as part of a design and build project; temporary works engineer designing formwork and false work; and interior designer, shop-fitter and landscape architect.

Fall Prevention Equipment means equipment used to arrest the person in a fall from an elevated position, including personal equipment, body harness, lanyards, lifelines or physical equipment, guardrails, toe-boards, screens, barricades, anchorages or similar equipment.

Fall Arrest Equipment means equipment used to arrest the person in a fall from an elevated position, including personal equipment, body harness, lanyards, deceleration devices, lifelines or similar equipment, but excluding body belts.

Hazard means a source of or exposure to danger

Hazard identification means the identification and documenting of existing or expected hazards to the health and safety of persons, which are normally associated with the type of construction work being executed or to be executed

Risk assessment is an activity conducted by competent person which includes

(a) the identification of the risks and hazards to which persons may be exposed to;

(b) the analysis and evaluation of risks and hazards identified;

(c) a documented plan of safe work procedure to mitigate, reduce or control the risks and hazards that have been identified;

(d) monitoring plan; and

(e) a review plan.

Excavation work means making of any man-made cavity, trench, pit or depression formed by cutting, digging or scooping

Ergonomics means application of scientific information concerning humans to the design of objects, systems and the environment for human use in order to optimise human well-being and the overall system performance

4. NOTIFICATION OF CONSTRUCTION

Any contractor who intends to carry out construction which includes the construction work listed below must notify the Provincial Director prior commencement of any work at least 3 days after being officially notified that he/she has been awarded the tender to carry out such work. Proof of such notification must be submitted for reference purposes.

(a) the demolition of a structure exceeding a height of 3 meters; or

(b) the use of explosives to perform construction work; or

(c) the dismantling of fixed plant at a height greater than 3 meters;

(d) when the construction work exceeds 30 days or will involve more than 300 person days of construction work;

(e) excavation work deeper than 1 meter; or

(f) working at a height greater than 3 meters above ground or a landing.

5. REGISTRATION WITH THE WORKMEN'S COMPENSATION OR LICENSED INSURER

Contractors shall ensure that the client is provided with a letter of good standing including a registration number with the Compensation for Occupational Injury and Diseases Fund or an alternative scheme approved in writing by the Commissioner to the COID Fund at least 3 days prior commencement of construction work.

Contractors shall ensure that the client is provided with a letter of good standing including a registration number with the Compensation for Occupational Injury and Diseases Fund or an alternative scheme approved in writing by the Commissioner to the COID Fund at least three (3) days prior commencement of construction work.

6. MANDATARY FORM

Not applicable

7. ASSIGNED PERSON IN TERMS OF OCCUPATIONAL HEALTH & SAFETY ACT OF 1993 & ITS REGULATIONS

A written letter of appointment shall be forwarded to the client duly signed by responsible persons at least 3 days prior commencement of construction work for the following duties:

(a) Person assigned duties in terms of the 16.2 appointees of the Act
(b) Construction Work Supervisor
(c) Assistant Construction Work Supervisor
(d) Full-time or part-time Construction Safety Officer
(e) Scaffolding Erector
(f) Scaffolding Inspector
(g) Excavation Supervisor
(h) Explosive Powered Tool Supervisor
(i) Fire Equipment Supervisor
(j) Portable Electrical Equipment Supervisor
(k) Ladder Supervisor
(l) Personal Protective Equipment Supervisor
(m) Electrical Supervisor
(n) Lifting Machine Supervisor
(o) Lifting Tackle Supervisor
(p) Stacking and Housekeeping Supervisor
(q) Workshop and Plant Supervisor
(r) Oxy-acetylene Gas Cutting/Welding Supervisor
(s) Safety Representatives
(t) Competent Person in Risk Assessment
(u) Hazardous chemical substances Controller/Co-ordinator
(v) First Aider
(w) Incident Investigator
(x) Formwork and Support work Supervisor

8. HEALTH AND SAFETY PLAN

A contractor shall provide the client with a Health and Safety Plan document that shall includes the following during tendering process, before commencement of construction work and during construction:

8.1 Contractor's Health & Safety Policy

A Contractor shall provide a health & safety policy signed by the Chief Executive Officer (CEO).which outlines contractor's commitment towards health and safety

8.2 Health and Safety Organogram

A Contractor shall provide a health & safety organogram which outlines the team leaders, 16.2 appointees, construction work supervisor, assistant construction work supervisor, safety representatives, safety committee members and other related appointments in terms of the OHSAct. The contact numbers should also be provided for easy reference.

8.3 Risk assessment

A risk assessment shall be conducted by a competent person, this includes:

1. identification of risks and hazards to which persons may be exposed; this is also to include ergonomic related

2. hazard analysis and evaluation of the identified risks and hazards;

3. a documented plan of safe work procedure to mitigate, reduce or control the risks and hazards that have been identified;

4. a monitoring and review plan of risks and hazards

5. relevant personal protective equipment or clothing to be provided which is SABS approved

6. fall protection plan for work carried in elevated position(s)

The contractor shall ensure that all employees are informed, instructed and trained by a competent person regarding any hazard and the related procedure before any work commences.

8.4 Fall Protection Plan

A contractor shall submit a risk assessment conducted by a competent person outlining the procedure and methods used to address all risks identified per location. A contractor shall ensure that employees working in such elevated positions undergo a medical examination conducted by a registered occupational health practitioner. A certificate of fitness (that is employee's physical and psychological fitness) valid for a year, shall be submitted prior commencement of construction. A contractor shall ensure that employees working from elevated positions receive proper training and such records are kept on file for reference purposes.

A contractor shall ensure that no person works in an elevated position, unless such work is performed safely as if working from a scaffold or ladder.

A contractor shall ensure that fall prevention and fall arrest equipment is inspected for its suitability and strength before use to ensure that it is safe for use and such inspections shall be recorded and kept on file for reference.

A contractor shall ensure that fall arrest equipment is used only if not reasonably practicable to use fall prevention equipment. Precautionary measures shall be taken by the contractor to ensure that in the event of fall by any person, the fall arrest equipment or the surrounding environment does not cause injury to the person.

8.5 Health and Safety Representatives

A contractor shall ensure that Health and Safety Representative(s) is/are elected and delegated in writing and necessary training has been provided by a competent person. A proof of training certificate shall be provided to THE CLIENT prior commencement of construction work.

Health and Safety Representatives shall conduct regular inspections by completing a mutually acceptable form of checklist developed by the contractor. Safety defects noted shall be recorded and reported to the supervisor for remedial action. Health and Safety Representative Inspection findings shall be made available to THE CLIENT for reference and audits purposes.

Health and Safety Representatives and their reports shall form part of the safety committee which shall meet on a regular bases as stated by the contractor.

8.6 Health and Safety Committee

A contractor shall hold health and safety meetings on site. Minutes of such meetings and action taken by management shall be kept on file and made available to THE CLIENT for reference purposes. Members of the committee shall receive proper training and a proof of such training shall be made available.

The contractor shall ensure that THE CLIENT Safety Department is invited to such meetings. These meetings do not substitute for Contractor's Site meetings.

8.7 HEALTH & SAFETY TRAINING

ENVIRONMENTAL HEALTH & SAFETY INDUCTION

A contractor shall attend an Induction training session conducted by THE CLIENT Safety at least 3 days prior commencement of construction work. An attendance register shall be provided to the contractor to keep it on their health and safety file.

For any construction work to be conducted on the Airside, an Airside Safety Induction training shall be attended by all persons entering who are to enter Airside and a course fee determined by THE CLIENT shall be paid by the Contractor. A security permit to access airside shall be issued on production of proof of attendance.

INDUCTION CONDUCTED BY CONTRACTOR & COMPETENT PERSON

A contractor must make sure that their personnel and persons visiting the site undergo an induction conducted by a competent person prior commencement of construction work. Every employee on site shall be in a possession of proof of the health and safety induction training

A contractor shall ensure that all visitors to a construction site undergo health and safety induction pertaining to the hazards prevalent on the site.

A manual /copy of such training shall be provided to THE CLIENT for reference purposes.

As a risk assessment determines, a contractor shall ensure that all employees under his/her control are trained by a competent person and a proof of such training is kept on file for reference.

Toolbox Talks

A Contractor shall ensure that employees attend a formal Toolbox conducted at least on a weekly basis. Toolbox Talks shall cover a wide variety of topics related to health and safety. An attendance register shall be completed by employees who attended such Talks. The register shall indicate the topic covered, presenter, date and signatures of employees attended. Records for Toolbox Talks shall be kept in a health and safety file and be made available to THE CLIENT for perusal.

First Aid Training

A contractor shall appoint First Aider(s) in writing. A letter of appointment shall be kept on file for reference made available to THE CLIENT Safety. Duly designated First Aider(s) shall undergo for training conducted by an accredited institution prior commencement of construction work and a proof of certificate be submitted to THE CLIENT for reference.

The Contractor shall ensure that the first aid box(es) is/are controlled by qualified First Aider(s) and kept fully stocked with necessary first aid contents related to the hazards and risks identified. A first aid box must be accessible and location of such boxes) is clearly displayed on site.

8.8 Fire prevention and Protection

A contractor shall ensure that adequate fire equipment is provided in strategic places (that is, where there is a mobile distribution board, flammable liquids, vessels under pressure, confined spaces, hot work etc). A contractor shall ensure that such equipment is inspected by a competent person on a regular basis and such inspections are recorded on a register. A contractor shall ensure that all fire equipment is serviceable and person(s) have been properly trained on how to use the equipment. A proof of such training shall be provided prior commencement of construction work.

8.9 EMERGENCY PREPAREDNESS

A contractor shall provide THE CLIENT with an emergency plan and procedure which will include, but not limited to emergencies such as fire, bomb threat, civil unrest, medical treatment, environmental incidents, accidents to employees and other persons other than their employees.

Emergency procedure shall be communicated to employees and a proof of such training shall be kept on file for reference. A list of emergency contact numbers shall be conspicuously displayed on site for ease reference. An evacuation plan shall be displayed in strategic places.

A contractor shall provide THE CLIENT Safety with a full record of any incidents which may occur on site.

8.10 Incidents/Accidents Reporting and Investigation

A Contractor shall ensure that all incidents/accidents (this includes near miss, first aid cases and section 24 cases) are reported by employees immediately to the Construction Work Supervisor for further investigation and remedial action. A Contractor shall ensure that all section 24 incidents/accidents and incidents other than employees are reported to the Department of Labour immediately and preliminary investigation is conducted by a competent person within seven days. If construction work will be finished within 3 days after occurrence, an investigation shall be conducted before such construction work is ceased. Proof of such records shall be submitted to THE CLIENT immediately or within 24 hours.

8.11 Personal Protective Clothing/Equipment

A contractor shall ensure that personal protective equipment or clothing needs analysis is conducted and incorporated into the risk assessment. Records shall be provided by the contractor prior commencement of construction work. A contractor shall ensure that SABS approved personal protective equipment or clothing is provided to personnel The contractor shall ensure that no personnel are allowed to work on site without necessary personal protective equipment or clothing. A contractor shall ensure that PPE or Clothing is kept in good working order.

A contractor shall clearly stipulate procedures to be followed when PPE or Clothing is lost or stolen, worn or damaged. THE CLIENT shall remove any person from construction site who is working without necessary personal protective equipment and/or clothing. Worn or tattered personal protective clothing shall not be permitted on airport premises.

9. GENERAL HEALTH & SAFETY REQUIREMENTS

9.1 Roof Work

A contractor shall ensure that all necessary health and safety precautions stated in the General Safety Regulations and Construction Regulations are taken into consideration when conducting any roof work. A contractor shall ensure that no person(s) is /are permitted to work on roof during inclement weather conditions.

9.2 Structure

A contractor shall provide THE CLIENT with necessary precautionary safety measures to be taken as stipulated in Construction Regulation 9 to obviate any uncontrolled collapse of new structure or existing structure or any part thereof which may become unstable or is in temporary state of weakness or instability due to carrying out of construction work.

9.3 Designer

The designer shall conduct regular inspections to ensure that a contractor is erecting a structure according to the designs and records of inspections shall be kept on site for reference. The frequency of inspections shall be determined by the nature of construction.

A designer can stop any contractor from executing any construction work which is not in accordance with the relevant design. A certificate of commissioning shall be issued by the designer after completion of structure.

9.4 Scaffolding Erection/Dismantling

A contractor shall ensure that scaffolding is erected and dismantled under the supervision of a competent person. A letter of appointment of the scaffold erector and inspector and their proof of competency shall be provided prior commencement of work. A contractor shall ensure that all safety standards stipulated in Construction Regulation are adhered to.

A proof of weekly inspections and inspection conducted after inclement weather shall be kept on file for reference.

9.5 Excavation Work

A contractor shall ensure excavation work is conducted under supervision of a competent person who has been appointed in writing. A letter of appointment shall be provided to THE CLIENT Safety prior commencement of work. A risk assessment outlining safe work procedures to be adhered to if excavation is more than 1.5m deep must be provided to THE CLIENT prior commencement of work. A contractor shall ensure that no person works in an excavation which is not adequately braced or shored. Other safety precautions stated in annexure A should be taken into consideration.

A contractor shall ensure that every excavation including bracing and shoring are inspected daily prior each shift starts and such records are kept on site for reference.

A contractor shall ensure that all precautionary measure as stipulated for confined spaces as stated in the General Safety Regulation are complied with when entering any excavation. A contractor shall ensure that warning signs are conspicuously displayed where excavation work involves the use of explosives and a method statement developed by a competent person is provided to THE CLIENT prior commencement.

A contractor shall communicate, train and enforce safe work procedures pertaining to excavation work to his/her employees.

9.6 Demolition Work

A contractor shall ensure that a detailed structural engineering survey is conducted by a competent person and a method statement on the procedure to be followed is provided to THE CLIENT Safety. A contractor shall ensure that demolition work is conducted under the supervision of a competent person appointed in writing.

A contractor shall ensure that safety precautionary measures stipulated in Asbestos Regulations is adhered to if demolition work involves asbestos material and that asbestos work is conducted under the supervision of a registered Asbestos Contractor.

9.7 Explosive Power Tools

A contractor shall ensure that no person uses explosive power tools unless they have been properly trained, tools are properly guarded and inspected daily before use by a competent person who has been appointed in writing. A proof of such appointment and competency is kept on file for reference. A contractor shall ensure that warning signs are conspicuously displayed when explosive power tools are in use. A contractor shall ensure that all safety precautions are adhered to as stipulated in the Explosive Regulations and Construction Regulations

9.8 Portable Electrical Tools and Electrical Installation

A contractor shall ensure that all portable electrical tools are properly maintained, inspected before use by a competent person who is appointed in writing to perform such duties.

A contractor shall ensure that the electrical power tools are provided with earth leakage protection and are of double insulated type.

A contractor shall ensure that portable electrical tools are numbered and identified and entered onto a register. Regular inspections shall be recorded onto a register and kept on site.

A contractor shall ensure that prior notice is given to THE CLIENT Electrical Engineer of any work involving electrical isolation. A lock-out certificate shall be issued to the relevant Contractor. A contractor shall ensure that a lock-out procedure is adhered to by his/her employees whenever required. A contractor shall ensure that safety measures stipulated in the Electrical Installation Regulations, Machinery Regulations, General Machinery Regulations and Construction Regulations are adhered to at all times.

9.9 Lifting Equipment, Tackle, Material Hoist & Cranes

A contractor shall ensure that all lifting equipment and tackle is inspected before use and a monthly register is completed by a competent person. Proof of such inspections shall be recorded and kept on file for reference. A contractor shall ensure that a safe working load is conspicuously displayed on lifting equipment and tackle and service certificate is provided prior commencement of work. A contractor shall ensure operators are properly trained on how to operate the above equipment and a proof of competency is provided prior commencement of work.

A Contractor shall provide information on a procedures to be followed in the case of :

(a) the malfunctioning of equipment; and

(b) the discovery of a suspected defect in the equipment

A contractor shall ensure that safety measures stipulated in Driven Machinery Regulation and Construction Regulation with regard to above equipment are adhered to at all times.

9.10 Ladders

A contractor shall ensure that all ladders are numbered, inspected before use and weekly inspections are recorded in a register. A contractor shall ensure that a competent person who carries the above inspections is appointed in writing.

9.11 Storage of Flammable Liquids

A contractor shall ensure that a competent person is designated in writing to control the storage and usage of Hazardous Chemical Substances (HCS). A letter of appointment shall be provided prior commencement of construction work.

A contractor shall ensure that material safety data sheets (MSDS) of chemical substances brought on site are kept on site and such documents have been communicated to the chemical substance users and First Aiders.

A contractor shall ensure that safety measures stated in Hazardous Chemical Substances Regulations, General Safety Regulation, Construction Regulation and Community Safety Fire By-law are applied at all times.

9.12 Vessels Under Pressure

A contractor shall ensure that vessels under pressure are identified, numbered and entered in a register. A contractor shall ensure that a competent person is designated to supervise the use and maintenance of vessels under pressure. A contractor shall ensure that inspections are carried out and test of certificates are available and kept on file.

9.13 Employees exposed to excessive noise

A contractor shall ensure that all employees exposed to excessive noise (equal or above 85 dB(A) have undergone a baseline audiometric test prior commencement of construction work and SABS approved ear protection is provided and worn at all times.

9.14 Stacking and Storage

A contractor shall ensure a competent person is appointed in writing with a duty of supervising all stacking and storage on a construction work or site. A proof of such appointment shall be provided prior commencement of construction work. A contractor shall ensure that stacking is conducted under supervision and good housekeeping is maintained at all times

9.15 Ablutions/Changing/Eating Facility

A contractor shall ensure that sufficient shower, sanitary, changing facilities for each sex and sheltered eating area(s) are provided for the employees. The above facilities must be kept in a clean, hygiene, safe condition and in good state of repair.

9.16 Housekeeping on Sites

A contractor shall ensure that good housekeeping is maintained and enforced at all times. A contractor shall ensure that safety precautionary measures stipulated in Environmental Regulations for Workplaces and Construction Regulations and Construction Environmental Specification are adhered to at all times.

9.17 Public Safety & Security

A contractor shall ensure that notices and signs are conspicuously displayed at the entrance and along the perimeter fence indicating “No Unauthorised Entry”, “Visitors to report to office”, “helmet and safety shoes” etc

A contractor shall ensure that nets, canopies, fans etc are provided to protect the public passing or entering the site. A contractor shall ensure that Security guard is provided where necessary and provided with a way of communication and an access control measures or register is in place.

A contractor shall ensure that all visitors to a construction site undergo health and safety induction pertaining to the hazards prevalent on the site.

9.18 Night Work

A contractor shall ensure that necessary arrangements have been made with THE CLIENT before conducting any night work. A contractor shall ensure that there is adequate lighting for any work conducted at night and failure to do so shall result in work being stopped.

9.19 Hot Work

A contractor shall ensure that Fire & Rescue Department is notified of any hot work to be conducted during construction work. A hot work permit accompanied with a gas free certificate shall be issued to the relevant contractor by THE CLIENT Fire & Rescue Department when satisfied that the area is safe and that the Contractor understands the procedure. A contractor shall ensure that a hot work procedure is adhered to at all time by his/her employees.

9.20 Construction Vehicles

A contractor shall ensure that all construction vehicles are maintained in a good working order, regular inspections are conducted and such records are kept on site. A contractor shall ensure that construction vehicle(s) is/are operated by only certified competent and authorised persons. A contractor shall ensure that s/he complies with the safety measures stipulated in Construction Regulation and National Road Transport Regulations, 2000.

9.21 Hired Plant and Machinery

A contractor shall ensure that any hired plant and/or machinery brought to site is inspected by a competent person before use and records confirming that it is safe for use are provided prior usage of such equipment. A contractor shall ensure that such plant or machinery complies with the requirements of the Occupational Health & Safety Act. A contractor shall ensure that hired operators receive induction prior commencement of work. A contractor shall ensure that hired operators have proof of competency. A Contractor shall provide information on a procedures to be followed in the case of :

(a) the malfunctioning of equipment; and

(b) the discovery of a suspected defect in the equipment

9.22 Road Construction Work

A contractor shall ensure that construction work conducted on the public road is done in a safe manner that is not detrimental to the safety of the public road users. A contractor shall ensure that all necessary caution signage are strategically and conspicuously displayed within 150 m from the actual construction work and things like cones, flag man etc are also provided where necessary.

10. OCCUPATIONAL HEALTH MEDICAL SERVICES

A contractor shall ensure that when a hazard identification and risk assessment (HIRA) is conducted occupational health hazards are clearly identified and health & hygiene measures are clearly outlined to ensure compliance. A contractor shall ensure that where certificate of fitness is required is provided prior commencement of construction work.

A contractor shall be provided with a number to be used for medical emergencies.

11. LIQUOR, DRUGS, DANGEROUS WEAPONS, FIREARMS

A contractor shall ensure that no person is allowed on site that appears to be under the influence of intoxicating liquor or drugs. A contractor shall encourage his/her workforce to disclose medication that pose a health and safety threat towards his/her fellow employees.

No person shall be allowed to enter the site and work if the side effects of such medication do constitute a threat to the health or safety of the person concerned or others at such workplace. No dangerous or firearms shall be allowed on construction site.

12. INTERNAL/EXTERNAL AUDITS

A contractor shall conduct weekly safety, health and environment audits and such records shall be kept on site. A contractor shall ensure that corrective measures are taken to ensure compliance.

THE CLIENT shall conduct regular audits and defects noted shall be reported to the relevant contractor for remedial action. Inspections shall be conducted by THE CLIENT and non-conformances noted shall be recorded and provided to the relevant contractor for remedial action. THE CLIENT shall stop any contractor from executing any construction work which is not in accordance with the health and safety plan.

A contractor shall ensure that all necessary documents stipulated in this document are kept on the health and safety file and made available when requested.

Activity	Name	Signature	Date
Prepared by			
Approval			
Authorisation			

VICTORIA WEST– UPGRADING OF GROUNDWATER SUPPLY

TENDER NO. UB/VW/23/2022

PART C4: SITE INFORMATION

VICTORIA WEST– UPGRADING OF GROUNDWATER SUPPLY

TENDER NO. UB/VW/23/2022

PART C4: SITE INFORMATION

VICTORIA WEST– UPGRADING OF GROUNDWATER SUPPLY

TENDER NO. UB/VW/23/2022

C4: SITE INFORMATION

C4.1 SCOPE

The documentation included in this section describes the site as at the time of tender to enable the tenderer to price his tender and to decide upon his method of working and programming.

Only actual information about physical conditions on the site and its surroundings has been included in this section and interpretation is a matter for the tenderers.

C4.2 SUBSOIL INVESTIGATIONS

No formal geotechnical investigation has been done on this project. Prospective tenderers shall acquaint themselves with the nature of the materials found on site. Certain portions of the total excavation may have to be done by mechanical breakers and / or blasting.

No claims whatsoever that may arise because of unforeseen ground and subsoil conditions will be considered. It is the responsibility for the Contractor to ascertain for himself the nature of the ground and subsoil as well as the conditions on site.

It is the Contractor's responsibility to supply and deliver all materials that comply with the minimum standards as well as for the building and maintaining of access roads to the works on site, haul areas or dumping sites. No additional payment will be applicable to the above-mentioned other than the relevant items in the schedule of quantities.

C4.3 "AS BUILT" DRAWINGS – WATER RETICULATION NETWORK

No data for existing services could be obtained and data for existing services on drawings are based on field observations done with representatives of the local municipality. Prospective tenderers shall acquaint themselves with existing site services.

No claims for damage to services may arise because of incorrect or incomplete data provided by the Engineer or the Client and it is the responsibility for the Contractor to ascertain himself of services encountered.

The Contractor must update a drawing with existing services encountered during construction and submit to the Engineer at practical completion stage.

VICTORIA WEST– UPGRADING OF GROUNDWATER SUPPLY

TENDER NO. UB/VW/23/2022

PART C4.3: ENIVIRONMENTAL MANAGEMENT PLAN & ROD

UBUNTU LOCAL MUNICIPALITY ENVIRONMENTAL MANAGEMENT PLAN FOR UPGRADING OF GROUNDWATER SUPPLY, DRILLING OF BOREHOLES, STORAGE AND CONSTRUCTION OF NEW PIPELINES, VICTORIA WEST

Ubuntu Municipality

June 2021

COMPILED BY:
iX engineers (Pty) Ltd
Hillside Offices | 277 The Hillside Street | Menlo Park I Pretoria I 0081 I RSA
PO Box 22, Menlyn 0063
South Africa
Telephone: +27 (0)12 745 2000

Author: Thandi Notshe
Email: Thandi.n@ixengineers.co.za

Reviewer: Thandazo Makhushe
Email: Thandazo.m@ixengineers.co.za

1. BACKGROUND

iX engineers have been appointed for the bulk water supply project for Victoria West, Ubuntu Local Municipality, Northern Cape. This Environmental Management Plan or Programme (hereinafter referred to as the "EMP") is developed in an effort to improve sustainable development and to reduce environmental impacts during the project.
This Environmental Management Plan is a plan or programme that aims to achieve the required end state and describes how activities (related to the proposed project), that have or could have an adverse impact on the environment, will be mitigated, controlled, and monitored.

The Bill of Rights under Section 24 of the Constitution of South Africa, states that, 'everyone has a right to an environment that is not harmful to their health and well-being and also to have the environment protected for the benefit of the present and future generations'.
Section 28 of the National Environmental Management Act 107 of 1998, prescribes a duty of care for the environment and remediation of environmental damage. The Constitution as well as the environmental legislation puts an obligation on all stakeholders involved in the project to take all reasonable measures to prevent such negative environmental impacts from occurring, continuing or recurring hence the need for an Environmental Management Plan (EMP) to be implemented during drilling of boreholes and the construction of approximately 12.5 km of bulk water pipeline for Victoria West.

The EMP will address the environmental impacts during all the phases of the project. In order to achieve environmental protection during the entire project, several environmental specifications/recommendations are made. These are aimed at ensuring that the contractor(s) maintain adequate control over the project in order to:

- Minimise the extent of impact during construction.
- Ensure appropriate restoration of areas affected by construction.
- Prevent long term environmental degradation.

The contractor(s) must be made aware of the environmental obligations that are stipulated in this document and must declare themselves to be conversant of all

relevant environmental legislation. The Project Manager / Environmental Control Officer will monitor the implementation of the procedures.
iX engineers will provide a comprehensive and practically implementable Environmental Management Plan during the execution of the project at the project site in Victoria West, Ubuntu Local Municipality, Northern Cape.

2. PURPOSE OF THE EMP

The purpose of the EMP is the following:

- To develop action plans for achieving the objectives of the EMP.
- It is a precautionary and a best practice approach for the execution of the project;
- To ensure legal compliance.
- Provide mitigation measures to be implemented; and
- Outlines a management plan to ensure effective prevention of environmental degradation.

The EMP will thus ensure that all relevant factors are considered to ensure environmentally responsible development. It provides specifications for "good environmental practice" for application during all the project phases, and an overall contribution to integrated environmental management.

3. PROJECT DESCRIPTION AND LOCATION

Victoria West in Ubuntu Local Municipality is situated in a drought-stricken area within the Pixley Ka Seme District Municipality area of jurisdiction in the Northern Cape.

Boreholes are the main water source for Victoria West. The proposed project is for the development of boreholes by equipping new and existing boreholes excluding already operational borehole, and construction of bulk water pipeline. This entails the following:

- The installation of submersible pumps, non-return valves, chambers, power supply, etc.
- New pipelines from the new boreholes to new bulk rising mains.
- The installation of bulk rising mains (collector pipelines for all the boreholes) to a new storage tank (buffer tank).
- A new steel storage tank (buffer tank) with a 4-hour storage capacity, i.e. ± 260 kl.

- The installation of a gravity main from the new storage tank (buffer tank) to a new raw water storage tank at the new water treatment works at the existing Hostel reservoir site.
- A new steel raw water storage tank with a 12-hour storage capacity, i.e. ± 950 kl.
- Revise existing pipework at the existing Hostel reservoir site.
- The total length of the pipeline is: ±12.5km

The proposed project is approximately within 10 km radius of Victoria West.
The location of the site is as follows:

- Latitude (S) 31°23'29"
- Longitude (E) 23°06'48"

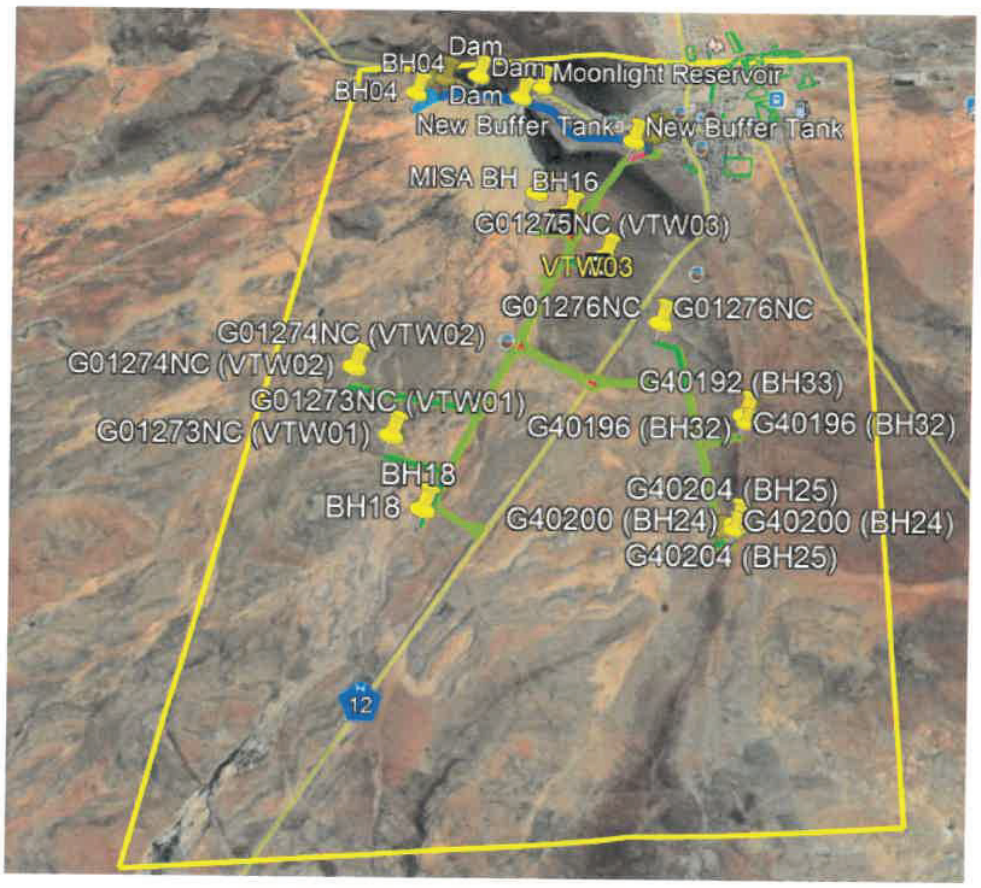

Figure 1: Victoria West Borehole Fields and Pipeline

4. SCOPE OF THE EMP

This EMP is applicable to all relevant parties in the construction works to be executed and it should be adhered to by all employees, contractors, and service providers to ensure proper environmental management is applied. This will be undertaken through regular auditing to achieve the fulfilment of the legal requirements for the project with particular reference to the prevention and mitigation of anticipated potential environmental impacts. This will be audited during regular audit occasions by an independant Environmental Control Officer (ECO).

5. ENVIRONMENTAL MANAGEMENT PRINCIPLES

Underlying principles or factors for this environmental management plan are as follows:

a) The 'polluter pays principle'

The National Environmental Management Act, (NEMA), Act 107 of 1996, states that all costs associated with the management of the environment should be borne by the persons who caused the environmental damage.

Such costs may include the following:

- Environmental impact minimization; and
- Rectifying environmental harm.

b) Precautionary principle and approach

This principle ensures that a substance or any activity that pose a significant risk to the environment is prevented from adversely affecting the environment. This principle is essential for the protection of the environment during the construction activities in Babatas.

c) Participatory principles

It is the duty of all persons to take part in making a collective environmental decision-making activities. Issues here include participation related to pollution generating activities, solid waste (construction water, chemically hazardous waste etc).

d) Carrying Capacity of Resources

It is important to use natural resources efficiently. Resources include soil, water, plants, etc.

e) Duty of Care

It is the responsibility of all personnel on site to maintain the ecological processes. Further, access to environmental resources carries the responsibility to use them in an ecologically sustainable economically efficient and socially fair manner.

f) Best Practicable Environmental Option (Risk reduction and environmental protection)

To successfully implement its EMP, all employees and other stakeholders need to be educated on the best environmental and waste management practices for effective participation in achieving integrated environmental management.

g) Continual improvement

This is a process that describes that environmental performance should continually be improved for the duration of the project.

6. LEGISLATIVE FRAMEWORK

The project is subject to compliance with the following pieces of legislation:

- National Environmental Management Act, 1998 (Act 107/1998) and its promulgated EIA Regulations of 2014 as amended by GNR 324, 325, 326 & 327 of 7 April 2017);
- National Water Act, 1998 (Act 36 of 1998) and its promulgated WULA Regulations of 2017
- Mineral and Petroleum Resources Development Act 28 of 2002
- National Environmental Management: Waste Act 59 of 2008
- National Forest Act (Act 84 of 1998)
- National Environmental Management: Biodiversity Act 10 of 2004
- National Heritage Resources Act 25 of 1999

The content of the EMP is consistent with the requirements as set out in Appendix 4 of the EIA regulations stated below (Figure 2), for the construction and operation phases.

According to APPENDIX 4 of GN R 982, an environmental management programme must include:

(a) Details of –
  (i) The EAP who prepared the environmental management programme; and
  (ii) The expertise of the EAP to prepare an environmental management programme, including a curriculum vitae;

(b) A detailed description of the aspects of the activity that are covered by the draft environmental management programme as identified by the project description;

(c) A map at an appropriate sale which superimposes the proposed activity, its associated structures, and infrastructure on the environmental sensitivities of the preferred site, indicating any areas that should be avoided, including buffers;

(d) Information on any proposed management or mitigation measures that will be taken to address the environmental impacts that have been identified in a report contemplated by these Regulations, including environmental impacts or objectives in respect of –
  (i) Planning and design;
  (ii) Pre-construction;
  (iii) construction activities;
  (iv) Rehabilitation of the environment after construction and where applicable post closure; and
  (v) where relevant, operation activities;

(e) a description and identification of impact outcomes required for the aspects contemplated in (d).

(f) a description of proposed impact management actions, identifying the manner in which the impact management objectives and outcomes contemplated in paragraphs (d) and (e) will be achieved, and must, where applicable include actions to –
  (i) Avoid, modify, remedy, control or stop any action, activity or process which causes pollution or environmental degradation;
  (ii) Comply with any prescribed environmental management standards or practices;
  (iii) Comply with any applicable provisions of the Act regarding closure, where applicable;
  (iv) Comply with any provisions of the Act regarding financial provisions for rehabilitation, where applicable;

(g) The method of monitoring the implementation of the impact management actions contemplated in paragraph (f);

(h) The frequency of monitoring the implementation of the impact management actions contemplated in (f);

(i) An indication of the persons who will be responsible for the implementation of the impact management actions;

(j) The time periods within which the impact management actions contemplated in paragraph (f) must be implemented;

(k) The mechanism for monitoring compliance with the impact management actions contemplated in paragraph (f);

(l) A program for reporting on compliance, taking into account the requirement as prescribed by the regulations;

(m) An environmental awareness plan describing the manner in which –
  (i) The applicant intends to inform his or her employees of any environmental risk which may result from their work; and
  (ii) Risks must be dealt with in order to avoid pollution or the degradation of the environment; and

(n) Any specific information that may be required by the competent authority.

Figure 2: Appendix 4 of the EIA regulations

7. OBJECTIVES OF THE EMP

The objectives of the EMP are to:

- Ensure compliance with regulatory authority stipulations and guidelines which may be local, provincial, national and/or international;
- Minimise the extent of impact during construction
- Ensure appropriate restoration of areas affected by construction
- Prevent long term environmental degradation

The EMP also highlights specific requirements that will be monitored during the development and should the environmental impacts not have been satisfactory prevented or mitigated, corrective action will have to be taken. This document should therefore be seen as a guideline that will assist in minimizing the potential environmental impact of activities.

The EMP also defines the arrangement that will be put in place to ensure that mitigation measures are implemented by including recommendations of the role and responsibilities of the entire project team, including environmental management team and contractors.

8. RESPONSIBILITIES AND OBLIGATIONS OF THE MAIN STAKEHOLDERS

The effective implementation of this EMP is dependent on established of clear roles, responsibilities and reporting lines within an institutional framework. This section of the EMP gives guidance to the various environmental roles and their responsibilities during the construction phase of the project.

8.1 Project Manager

The Project Manager is responsible for overall management of the project and the implementation of the EMP. The following tasks fall within his / her responsibilities:

- Be familiar with the recommendations and mitigation measures of this EMP, and implement these measures;
- Monitor site activities for compliance;
- Conduct internal audits of the construction site against the EMP;

- Confine the construction site to the demarcated areas; and
- Rectify transgressions through the implementation of corrective action.

8.2 Contractor

The Contractor is responsible for the overall execution of the activities envisioned in the construction phase of the project, including the implementation and compliance with recommendations and conditions of the EMP. The Contractor must therefore ensure compliance with the EMP at all times during construction activities and maintain an environmental register which keeps a record of all environmental incidents that occur on the site during construction. These incidents may include:

- Public involvement / complaints;
- Health and safety incidents;
- Incidents involving Hazardous materials stored on site; and
- Non-compliance incidents.

The Contractor is also responsible for the implementation of corrective actions issued by the DEO and/ ECO and Project Manager within a reasonable or agreed upon period.

8.3 Designated Environmental Officer (DEO)

For the purposes of implementing the conditions contained herein, a DEO should be appointed by the contractor for the contract. The DEO must be the responsible person for ensuring that the provisions of the EMP and that any necessary environmental authorisations are complied with during the construction period. The DEO's duties in this regard will include, *but are not limited to*, the following:

- Understand the contents of the Environmental Management Plan (EMP) and explain it to the contractor, the site staff, the Project Manager and any other relevant personnel of I&AP's.
- Must be on site on a regular basis – preferably daily to supervise environmental actions associated with construction activities.
- Conduct regular site visits to be able to report on and respond to any environmental issues.
- Give feedback of the audits to the Project manager and Contractors. This must be in the form of a written report.

- Advise the Contractor on environmental issues within the defined work areas.
- Recommend corrective action when required for aspects of non-compliance within the EMP.
- Ensure that the contractor understands what is to be done to rectify and address any problems that have arisen from the audit.
- Be contactable by the public regarding matters of environmental concern as they relate to the operation of the works.

A DEO should be able to provide environmental awareness training to all staff on a construction site both in the induction phase as well as ongoing throughout the construction phase.

Below are steps to be implemented should there be increase in severity of environmental issues at the site:

- The DEO shall discuss the issue with the contractor or guilty party, and they work out a solution together, with a deadline by which the problem must be rectified. The DEO records the discussion and the solution implemented.
- The DEO observes a more serious infringement and notifies the guilty party and the Project Manager in writing, with a deadline by which the problem must be rectified.
- The DEO in conjunction with the Project Manager shall order the contractor to suspend part, or all, the works. The suspension will be enforced until the non-conformance has been rectified or until remedial measures have taken place if required.
- Breach of contract - One of the possible consequences of this is the removal of a contractor and/or equipment from the site and/or the termination of the contract, whether a construction contract or an employment contract.
- All costs for rectification will be borne by the contractor.

The EMP will be reviewed on an on-going basis. Based on observations during site inspections and issues raised at site meetings, the ECO will determine whether any procedures require modification to improve the efficiency and applicability of the EMP on site.
Any such changes or updates will be registered in the ECO's record, as well as being included as an annexure to this document. Annexures of this nature must be distributed to all relevant parties.

8.4 Independent Environmental Control Officer (ECO)

The independent environmental control officer (ECO) is responsible for monitoring all activities on site and ensuring that all contractors comply with the requirements of the conditions as stipulated in any environmental authorisation as well as the requirements as outlined in the EMPrs (Environmental Management Programmme). The ECO would be on the site on a regular basis (at least once a month) to assess the project, its aspects and impacts and advise as to the required actions in order to ensure that all legal requirements, best practise protocols, adherence to by-laws etc are achieved and to attend site meetings.

The ECO's duties normally include (but are not limited to) the following:

- Liaising with Client, Contract Manager and the Competent Authority throughout the construction and rehabilitation phases of the project;
- Assisting the Contract Manager and Principal Contractor in ensuring all the necessary environmental authorizations and permits have been obtained and confirming that the activities on the site comply with legislation;
- Inspecting the construction site and surrounding areas regularly with regards to addressing issues of concern that may have a negative impact on the environment.
- Keeping a photographic record of progress on the site from an environmental perspective;
- Prepare an environmental snag-list and close out report after the construction & rehabilitation phases has been completed.
- In addition it is common practise that the ECO would also be responsible for the auditing of the site from an environmental aspect which is usually done on a monthly basis. If it is a requirement of an environmental authorization or upon request by the competent authority, the results of such an audit are submitted to the environmental competent authority so that they can monitor compliance in terms of National Legislation.

An audit report would contain mitigation measures for each non-compliance issued raised; detail the time frames supplied for the rectification of such non-compliance issues; visual evidence of the site inspection in the form of photographs.

The ECO would also address and ensure that an ethos of progressive rehabilitation takes place throughout the construction phase so as to ensure that

the project site is rehabilitated to a high level of environmental integrity that is not only aesthetically pleasing but ecologically functional.

9. DOCUMENTATION ADMINSTRATION

At the outset of the project the following preliminary list of documents shall be placed in the filing system and be accessible at all times:

- Copy of the EMP as well as any amendments thereof;
- Copy of declaration of implementing generic EMP and subsequent approval of site specific EMP and amendments thereof;
- All method statements;
- Completed environmental checklists;
- Minutes and attendance register of environmental site meetings;
- An up-to-date environmental incident log;
- Copy of all instructions or directives issued;
- A copy of all corrective actions signed off. The corrective actions must be filed in such a way that a clear reference is made to the non-compliance record;
- Complaints register.

Definition: "**Method Statement**" means a written submission by the Contractor to the Project Manager in response to this EMP or a request by the Project Manager and ECO.

Before the construction activities commence, the Contractor must provide the Project Manager and ECO with a written method statement setting out the following:

- Details of the construction activities;
- Location where the activity will take place;
- Identification of impacts that might result from the activity;
- Identification of activities that may cause impacts;
- Methodology and/or specifications for impact prevention for each activity or aspect;
- Methodology and/or specifications for impact containment for each activity or aspect;
- Emergency/disaster incident and reaction procedures; and the
- Treatment and continued maintenance of the impacted environment.

The method statement must cover applicable details with regard to:

- development procedures;
- materials and equipment to be used;
- getting the equipment to and from site;
- how the equipment/ material will be moved while on site;
- how and where material will be stored;
- the containment (or action to be taken if containment is not possible) of leaks or spills of any liquid or material that may occur;
- timing and location of activities;
- compliance/ non-compliance with the EMP; and
- any other information deemed necessary by the ECO and Project Manager.

The Contractor should provide such information in advance of any or all construction activities provided that new submissions are given to the ECO whenever there is a change or variation to the original.
Unless indicated otherwise by the Project Manager, the Contractor shall provide the following method statements to the Project Manager no less than 14 days prior to the commencement date of the activity:

- Site establishment – Camps, Lay-down or storage areas, satellite camps, infrastructure; Workshop or plant servicing; Handling, transport and storage of Hazardous Chemical Substances;
- Vegetation management – Protected, clearing, aliens, felling;
- Access management – Roads, gates, crossings etc.; Fire plan;
- Waste management – transport, storage, segregation, classification, disposal (all waste streams);
- Social interaction – complaints management, compensation claims, access to properties etc.;
- Water – use (source, abstraction and disposal), access and all related information, crossings and mitigation;
- Emergency preparedness – Spills, training, other environmental emergencies;
- Dust and noise management methodologies;
- Fauna interaction and risk management – only if the risk was identified – wildlife interaction especially on game farms; and
- Heritage and palaeontology management.

The ECO should provide comment on the methodology and procedures proposed by the Contractor but he/she will not be responsible for the Contractor's chosen measures of impact mitigation and emergency/disaster management

systems. The DEO and ECO shall monitor and ensure that the contractors perform in accordance with these method statements.

9.1 Site Documentation

The following includes a list of documentation that must be held on site and must be made available to the ECO:

- Site daily diary /instruction book
- Records of all remediation / rehabilitation activities
- Copies of DEO reports (management and monitoring)
- Environmental Management Programme (EMP)
- Complaints register
- Toilet cleaning slips
- Waste removal slips
- Method Statements
- Plant/equipment daily checklist(s)

10. ENVIRONMENTAL MANAGEMENT PLAN

The EMP comprises steps to be taken in order to implement the objectives of EMP. It further identifies and recommend efficient drivers in order to manage the environment in line with the national legislation. It provides guidance regarding best environmental practices and provide recommendations to implement good environmental management practices and will allow to continually evaluate options to improve on environmental management (i.e. continual improvement).

This EMP is compiled in a tabular form for the ease of the users and is covering all the stages of this project i.e. planning, construction and operational phase. It is also compiled according to the environmental aspects that were identified during environmental screening. It will be used as a checklist during these stages of the development. Compliance with this EMP must be audited weekly by the DEO and monthly by the ECO during the construction phase and once immediately following completion of construction phase.

11. EMP IN PROJECT PHASES

11.1 The Pre-Construction Phase

This phase involves planning and detailed designs. Potential aspects, which could occur during construction and operation phases, are identified. Pro-active routes of addressing potential aspects before they occur have been adopted in this EMP, thus paving way to a sustainable development.

11.2 The Construction Phase

Major construction activities takes place during this phase, thus resulting in bulk impacts which have immediate effects, these include, noise, dust, water, etc. Stringent and frequent monitoring during this phase would assist in early identification or identification of impacts as they occur, and immediate contingency plans as stated in the EMP would be applied.

11.3 PROPOSED IMPACT MANAGEMENT ACTIONS

Mitigation measures are important to reduce, limit, eliminate or compensate for impacts, to acceptable/insignificant levels. In setting mitigation measures, the practical implications of executing these measures must be borne in mind. With early planning, both the cost and the impacts can be minimised.
The stipulations of this report should be conveyed to contractors prior to the commencement of the project.

Table 1: Planning and Design Phase - Impact Management and Actions

PLANNING AND DESIGN PHASE							
Aspect	**Potential Impact**	**Activity**	**Mitigation Measure (Objective and Target)**	**Method of Monitoring**	**Implementation Responsibility**	**Frequency**	**Performance Indicator**
Project contract	Non-compliance	Planning and appointment of the contractor	**Objective(s):** To make the EMPr enforceable under the general conditions of the contract. **Measures:** · The EMPr document must be included as part of the tender documentation for all contractor appointments.	Tender/contract auditing by ECO	Client Project Manager	Planning	The EMPr is included as part of the tender documentation
Legislation	Non-compliance could lead to project failure or delays and	Planning of project works	**Objective(s):** To comply with legislative obligations relating to the project. **Measures:**	Initial document auditing by ECO. Daily	Project Manager, Engineer, Contractor, DEO and ECO	On-going	Full compliance to legislature and EMPR. Minimised

PLANNING AND DESIGN PHASE							
Aspect	**Potential Impact**	**Activity**	**Mitigation Measure (Objective and Target)**	**Method of Monitoring**	**Implementation Responsibility**	**Frequency**	**Performance Indicator**
	undue disturbance to the natural environment		· All necessary authorisations, permits and licences must be obtained by the applicant prior to the commencement of construction. · All relevant environmental, health and Safety legislation, by-laws and associated regulations promulgated in terms of these laws must be adhered to and the Developer is to ensure that the project is compliant through-out. · A copy of this EMPR, and any other relevant authorisations must be kept on-site. · The Contractor must familiarise himself/herself with the contents and requirements of this EMPR. · Should a situation arise where compliance with the EMPR is likely to be compromised/deviated from due to exceptional circumstances or a change in scope of work, the Contractor must notify the ECO immediately. · The ECO will assess the type of deviation and its significance and will	monitoring by DEO. Monthly audits by ECO			environmental degradation.

PLANNING AND DESIGN PHASE							
Aspect	**Potential Impact**	**Activity**	**Mitigation Measure (Objective and Target)**	**Method of Monitoring**	**Implementation Responsibility**	**Frequency**	**Performance Indicator**
			advise the whether the deviation requires an amendment to the EMPR. · Should a situation arise where there is accidental or intentional non-conformance with the EMPR. the ECO may order all work to stop until such non-conformance has been assessed, reported to the relevant authority (if necessary) and appropriately mitigated. · A non-conformance will be recorded in writing by the ECO with a description (and photographic evidence where applicable) of the incident/non-conformance. A non-conformance report will contain detailed actions and action dates for each responsible party and will be signed off by the ECO once completed/closed out.				
Pipeline design	Improper designs could lead to project failure	The design of the pipeline	**Objective(s):** To ensure stability of structures The detail design of the pipeline should be according to the relevant standards.		Engineer Client	Once Off	Proof that the designs are according to relevant standards.
Social - economic	Failure to appropriately	The appointment	**Objective(s):** To involve the local community in the	Tender process	Principal Consultant and	Once-off	The appointment

PLANNING AND DESIGN PHASE							
Aspect	**Potential Impact**	**Activity**	**Mitigation Measure (Objective and Target)**	**Method of Monitoring**	**Implementation Responsibility**	**Frequency**	**Performance Indicator**
	communicate with the locals regarding proposed project and work opportunities may result in conflict.	of sub-contractors, suppliers and general labourers. Communication of the project to surrounding landowners.	project to allow for a mutual understanding, improve skills and contribute to its economic growth. **Measures:** · The Contractor shall, through all available community structures, inform the local community of the labour-intensive works and employment opportunities presented. · Preference must be given to people with previous practical experience in construction. · The Principal Consultants shall enter into an Agreement with the Ward Councilor, whereby the ward councilor shall provide the contractor with a Community Liaison Officer (CLO), from the local community. · The CLO shall amongst other duties be responsible for the liaison with the community for the entire project. · The surrounding landowners must be notified of the commencement of the construction activities by the Contractor well in advance of the actual start of the activities (At least 4	monitoring and continuous progress meetings.	Contractor		of local community members. Mutual understanding between the Contractor and the surrounding landowners regarding the proposed project and the activities that will be carried out.

PLANNING AND DESIGN PHASE							
Aspect	**Potential Impact**	**Activity**	**Mitigation Measure (Objective and Target)**	**Method of Monitoring**	**Implementation Responsibility**	**Frequency**	**Performance Indicator**
			weeks). · Surrounding landowners must be notified if the project may interfere with their daily operations (e.g., blocked access routes, temporary water and or electricity cuts).				

Table 2: Construction Phase - Impact Management and Actions

CONSTRUCTION PHASE							
Aspect	**Potential Impact**	**Activity**	**Mitigation Measure (Objective and Target)**	**Method of Monitoring**	**Implementation Responsibility**	**Frequency**	**Performance Indicator**
Biodiversity	Loss of indigenous vegetation and habitats Increase	Site establishment Clearing and grubbing of the site; Drilling of boreholes and,	**Objective(s):** · To prevent excessive disturbance in terms of vegetation clearance and the construction footprint. · Ensure that	Daily inspection by DEO, throughout the construction phase Monthly audits	Contractor, DEO and ECO	Daily by DEO & monthly by ECO	Approved site layout plan is implemented and maintained. Already

CONSTRUCTION PHASE							
Aspect	**Potential Impact**	**Activity**	**Mitigation Measure (Objective and Target)**	**Method of Monitoring**	**Implementation Responsibility**	**Frequency**	**Performance Indicator**
	in alien vegetation Loss of fauna	construction of water pipeline and associated infrastructure	activities/facilities/site structures with pollution potential are located outside buffer zones, preferably in already disturbed or transformed areas. Examples include the site camp, material laydown areas, storage areas, ablution facilities etc. · Ensure that all activities remain within the approved construction footprint. **Measures:** · The Contractor must submit a site layout to the ECO for approval. · The Contractor must prioritise the use of disturbed areas for campsite establishment,	by ECO			disturbed areas are prioritised for site camp, laydown, storage and stockpile areas. Construction footprint and vegetation clearance is controlled and kept to a minimum. Activities are restricted to within the approved construction

CONSTRUCTION PHASE							
Aspect	**Potential Impact**	**Activity**	**Mitigation Measure (Objective and Target)**	**Method of Monitoring**	**Implementation Responsibility**	**Frequency**	**Performance Indicator**
			laydown areas, storage areas and stockpile areas. · The site camp, laydown, storage areas and stockpile areas may not be established within any environmentally sensitive area. · The contractor may not remove or damage any trees or shrubs on-site without the permission of the ECO. The contractor must fence off the campsite with 1.8m high mesh fence with 90% green shade cloth. · The inside of the campsite shall be screened off from the public by 1.8m high green shade cloth neatly tied to the inside of the fence.				footprint. Demarcation remains visible and in place for the duration of construction. Effective eradication and management of alien invasive species. Surrounding fauna is protected as far as possible.

CONSTRUCTION PHASE							
Aspect	**Potential Impact**	**Activity**	**Mitigation Measure (Objective and Target)**	**Method of Monitoring**	**Implementation Responsibility**	**Frequency**	**Performance Indicator**
			· The Contractor is to ensure that all staff (e.g., plant operators, general workers) are informed of sensitive areas as part of the induction/environmental awareness training. · Should the Contractor disturb an area outside the approved footprint, then the Contractor will be held liable to reinstate the impacted area to its original condition. · The construction campsite must be kept tidy and clean always. · The site should be inspected and cleared of any litter. · General waste must be placed in suitable and closable				

CONSTRUCTION PHASE							
Aspect	**Potential Impact**	**Activity**	**Mitigation Measure (Objective and Target)**	**Method of Monitoring**	**Implementation Responsibility**	**Frequency**	**Performance Indicator**
			containers and the containers must be emptied weekly. · General waste must be disposed of at a registered landfill and disposal slips kept in the site file. · Invasion of alien invasive species in and around construction-site must be monitored and controlled. · All employees must be made aware of biodiversity conservation during environmental induction and toolbox talks. · All employees must be informed that the snaring and killing of fauna is prohibited. · Fauna may not be captured, poisoned, trapped or killed.				

CONSTRUCTION PHASE							
Aspect	**Potential Impact**	**Activity**	**Mitigation Measure (Objective and Target)**	**Method of Monitoring**	**Implementation Responsibility**	**Frequency**	**Performance Indicator**
			· The contact details of local snake catchers must be displayed on the campsite notice board where it is visible and accessible to all employees. · Trees may not be cut and collected from surrounding areas for firewood. · Excavations must be inspected for trapped animals prior to work commencing each day. · The use of pesticides is prohibited on-site. · All temporary footprint areas must be reinstated/rehabilitated at the end of construction.				
Fire	Loss of flora,	Excavations, tampering with	**Objectives:** To prevent the occurrence of	Daily	Contractor and DEO	Contractor Daily	Well monitored

CONSTRUCTION PHASE							
Aspect	**Potential Impact**	**Activity**	**Mitigation Measure (Objective and Target)**	**Method of Monitoring**	**Implementation Responsibility**	**Frequency**	**Performance Indicator**
	fauna, damage to infrastructure and injuries to human life.	electric cables, smoking on—site, the use of flammable substances	fires on-site and preserve biodiversity, protect infrastructure and prevent injuries human life. **Measures:** · Designate and mark smoking areas. · The smoking areas must be far from flammable substances. No fires may be ignited with the intent to destroy flora on-site and surrounding properties. · The burning of waste on-site is not allowed. · Validated fire extinguishers must be placed in conspicuous points and must be easily accessible. · At least one employee must be trained and certified in	inspections by the DEO and Contractor		throughout the construction phase	flammable substances. Designated smoking areas on-site. No incidents being reported relating to fire outbreaks.

CONSTRUCTION PHASE							
Aspect	**Potential Impact**	**Activity**	**Mitigation Measure (Objective and Target)**	**Method of Monitoring**	**Implementation Responsibility**	**Frequency**	**Performance Indicator**
			extinguishing fire's if ever it occurs. · The contact details of the local fire brigade and ambulances must be placed on the campsite notice board. · All employees must be made aware of the dangers of fire and ways in which one can put it out if it breaks. · Prior to drilling and excavations, inspections must be made to prevent the cutting of live electrical cords which may cause a fire outbreak and electrocutions. · All flammable, hazardous substances must be stored in cool, dry and well-ventilated areas.				

CONSTRUCTION PHASE							
Aspect	**Potential Impact**	**Activity**	**Mitigation Measure (Objective and Target)**	**Method of Monitoring**	**Implementation Responsibility**	**Frequency**	**Performance Indicator**
			· The storage facility must be labeled with the appropriate warning signs. · MSDS must be provided for all hazardous substances on-site. · Handling and use of hazardous and flammable substances should be under supervision of a designated competent person. · Residents must be warned by the Contractor of any fire outbreaks that may occur through the use of sirens. · An evacuation procedure plan that outlines the designated assembly points must be established on the campsite if ever a fire outbreak occurs.				

CONSTRUCTION PHASE							
Aspect	**Potential Impact**	**Activity**	**Mitigation Measure (Objective and Target)**	**Method of Monitoring**	**Implementation Responsibility**	**Frequency**	**Performance Indicator**
			· All workers and visitors on-site must be made aware of the evacuation procedures plan on a regular basis. · The ECO must be notified of any fires that may have occurred.				
Soil	Loss of valuable topsoil	Drilling Excavation of trenches Clearing and grubbing of the site	**Objectives:** To prevent and mitigate loss of topsoil, erosion and sedimentation on-site. **Measures:** · Topsoil shall be stripped from all areas that are to be utilised during the construction phase and where permanent structures and access is required. These areas will include the areas comprising	Monthly audits by ECO	The Contractor, DEO and ECO	On-going	Exposed/ bare soil is limited and rehabilitated immediately after completion of construction activities in an area. Erodible stockpiles are

CONSTRUCTION PHASE							
Aspect	**Potential Impact**	**Activity**	**Mitigation Measure (Objective and Target)**	**Method of Monitoring**	**Implementation Responsibility**	**Frequency**	**Performance Indicator**
			the permanent works, pipeline trenches, stockpiles, access roads, campsite, and laydown areas. · The topsoil removed for vegetation clearance must be stripped to a minimum depth of 150 mm and maximum depth of 250 mm and stockpiled on the higher lying areas. · Herbaceous vegetation, overlying grass and other fine organic matter shall not be removed from the stripped soil. · Soil shall be deemed to be the top layer of soil containing organic material, nutrients and plant and grass seed. For this reason, it is an extremely valuable resource for the				located outside areas of stormwater concentration. The construction site does not contribute notably to erosion onsite and in the immediate vicinity of the site. Erosion is detected/ identified and addressed/ mitigated Nutrient-rich topsoil is

CONSTRUCTION PHASE							
Aspect	**Potential Impact**	**Activity**	**Mitigation Measure (Objective and Target)**	**Method of Monitoring**	**Implementation Responsibility**	**Frequency**	**Performance Indicator**
			rehabilitation and vegetation of disturbed areas. · Vegetation and topsoil clearance should occur at increments. · Excavated material stockpiles should not be placed in steep areas with concentrated runoff/ flow. · Temporary soil stockpiles shall not be higher than 2,5 m (to compaction) and the slopes of soil stockpiles shall not be steeper than 1 vertical to 1,5 horizontal. · Disturbed areas must be rehabilitated as soon as possible after construction has been completed				stored and preserved to be used during the rehabilitation phase.
Stormwater	Soil	Campsite	**Objectives:**	Site inspections	The Contractor	On-going	Temporary

CONSTRUCTION PHASE							
Aspect	**Potential Impact**	**Activity**	**Mitigation Measure (Objective and Target)**	**Method of Monitoring**	**Implementation Responsibility**	**Frequency**	**Performance Indicator**
Management	erosion and sedimentation Flooding due to poor stormwater management.	establishment and overall construction activities	· To prevent excessive soil erosion and sedimentation in water resources or existing drainage systems. **Measures:** · If possible, construction activities should be scheduled for the dry winter months to decrease the risk of erosion during heavy thunderstorms. · A stormwater management plan must be drawn up to indicate how storm water will be managed onsite. · Particular attention must be paid to discharge points of storm water channels, where flow of water is concentrated. If these points are not sufficiently	by DEO. Monthly audits by ECO	DEO and ECO		stormwater management and erosion prevention measures are implemented in areas with high erosion potential or signs of extensive erosion occurring Stormwater runoff is dissipated and allowed to discharge at regular intervals

CONSTRUCTION PHASE							
Aspect	**Potential Impact**	**Activity**	**Mitigation Measure (Objective and Target)**	**Method of Monitoring**	**Implementation Responsibility**	**Frequency**	**Performance Indicator**
			stable for the increased flow rates, anticipated stabilisation measures have to be designed. · Temporary stormwater management and erosion prevention measures in areas with high erosion potential and within the campsite should be implemented (in consultation with the ECO). · The rehabilitation of the drainage channels on-site must be done according to the stormwater management plan. · Stormwater collecting on the cleared and excavated construction areas should be allowed to discharge into the surrounding vegetation at regular intervals and not be				

CONSTRUCTION PHASE							
Aspect	**Potential Impact**	**Activity**	**Mitigation Measure (Objective and Target)**	**Method of Monitoring**	**Implementation Responsibility**	**Frequency**	**Performance Indicator**
			allowed to pool.				
Soil and Ground and Surface Water	Contamination of soils and ground water due to the use of cement and possible spillages of sewage and or hazardous substances.	The use of cement during construction and installation of water infrastructure	**Objectives:** · Ensure proper cement handling, storage, and disposal, preventing discharge or disposal into the environment. · Ensure that cement, oil, fuel loaded water/ runoff from concrete/ mortar mixing and application activities is collected and retained on-site to allow for re-use in construction activities, preventing discharge into the environment. · Prevent the contamination of soil. **Measures:**	Daily inspection of batching area (Contractor) Reporting of major spills within 24 hrs. to the ECO by the DEO. Monthly audits by the ECO.	Contractor, DEO and ECO	On-going	Cement loaded runoff is contained to site in an appropriately sized settling system. Cement product is properly handled and stored and does not result in pollution of soil or water resources. No equipment used for

CONSTRUCTION PHASE							
Aspect	**Potential Impact**	**Activity**	**Mitigation Measure (Objective and Target)**	**Method of Monitoring**	**Implementation Responsibility**	**Frequency**	**Performance Indicator**
			Cement · Cement shall be stored in dry conditions for no longer than six weeks after delivery. · All material used in the mixing of concrete are to be of good quality, clean and clear of any organic material. · When cement is stored temporarily on-site, it shall be kept on a dry waterproof base with a waterproof cover. · The batching of concrete shall be done on a smooth impermeable surface. · All contaminated water flowing from batching area shall not be discharged into the environment. · Contaminated water storage				concrete/mortar mixing or application is washed in a watercourse.

CONSTRUCTION PHASE							
Aspect	**Potential Impact**	**Activity**	**Mitigation Measure (Objective and Target)**	**Method of Monitoring**	**Implementation Responsibility**	**Frequency**	**Performance Indicator**
			areas shall not be allowed to overflow and appropriate protection from rain and flooding shall be implemented. · Empty cement bags shall be stored in weatherproof containers to prevent windblown cement dust and water and soil contamination. · · Empty cement bags and oil containers shall be kept in bins designated for hazardous waste and disposed of on a regular basis. · After pouring, all visible remains of concrete shall be removed and appropriately disposed of. · Equipment used should not be washed in any watercourse.				

CONSTRUCTION PHASE							
Aspect	**Potential Impact**	**Activity**	**Mitigation Measure (Objective and Target)**	**Method of Monitoring**	**Implementation Responsibility**	**Frequency**	**Performance Indicator**
			· Cleaning buckets should be used, and the contaminated water disposed appropriately. **<u>Sewage</u>** · Chemical toilets must be provided on-site for construction works. · The toilets must be serviced regularly by a certified company and emptied at licensed sewage treatment facility. · Toilets must be kept clean at all times. · The Contractor must assess the location of existing sewage services to prevent the damage of pipelines which may cause leakages into the ground and				

CONSTRUCTION PHASE							
Aspect	**Potential Impact**	**Activity**	**Mitigation Measure (Objective and Target)**	**Method of Monitoring**	**Implementation Responsibility**	**Frequency**	**Performance Indicator**
			or watercourses. · Care must be taken if the sewage pipes are to be reinstated. · Spillage of any sewage due to construction activities must be reported to the Contractor, recorded as an incident and remediated immediately. **<u>Hazardous substances</u>** ·Hydrocarbons such as oils, diesel etc must be handled with care and kept far from sensitive areas. · Hazardous substances must be stored in bunded areas. · The refueling, washing and servicing of machinery and construction vehicles must be				

CONSTRUCTION PHASE							
Aspect	**Potential Impact**	**Activity**	**Mitigation Measure (Objective and Target)**	**Method of Monitoring**	**Implementation Responsibility**	**Frequency**	**Performance Indicator**
			conducted off-site. · Drip trays must be used under stationary vehicles or machinery that uses hazardous substances such as oil or fuel. · MSDS's must be provided for each substance stored on-site. · Suitable qualified individuals that are trained in the MSDS's of the substance in use must be appointed. · The spillage of any hydrocarbons must be cleaned up immediately using spill kits that are to be made available on-site throughout the construction phase. · Any significant spillages (sewage, cement, hydrocarbons) which occur				

CONSTRUCTION PHASE							
Aspect	**Potential Impact**	**Activity**	**Mitigation Measure (Objective and Target)**	**Method of Monitoring**	**Implementation Responsibility**	**Frequency**	**Performance Indicator**
			must be recorded in the Incident Register and the ECO must be informed of the incident with 24hrs of its occurrence.				
Health, Safety & Security	Possible injury or illness to site staff, residents and the general public.	Overall Construction activities	**Objectives:** · To provide a safe working and living environment for both site staff and residents. · To prevent injuries, accidents, and fatalities from occurring. · To prevent theft of equipment and machinery as well as ensure security of workers on-site. **Measures:** · The Contractor must comply with the Occupational Health	Daily monitoring Monthly Audits by ECO Monthly Audits by the appointed Safety Auditor	Contractor DEO, ECO and Safety Auditor	On-going	Safe working procedures being implemented according to the Occupational Health and Safety Act and the Site-specific health and Safety Plan. No

CONSTRUCTION PHASE							
Aspect	**Potential Impact**	**Activity**	**Mitigation Measure (Objective and Target)**	**Method of Monitoring**	**Implementation Responsibility**	**Frequency**	**Performance Indicator**
			and Safety act (Act 85 of 1993) and Construction Regulations throughout the project. · The Contractor should follow the Site-Specific Health and Safety Plan developed for this project. · The Contractor should place warning signs and danger tape as demarcation around the working area, especially excavations. · Construction works signage should be placed in areas in which the community (for example in terms of traffic) will be affected. · No residents / pedestrians are to be in close proximity to the excavated areas to prevent any				incidents/accidents being recorded. No fatalities recorded. No findings by Safety Auditor. No theft of construction equipment and/or machinery.

CONSTRUCTION PHASE							
Aspect	**Potential Impact**	**Activity**	**Mitigation Measure (Objective and Target)**	**Method of Monitoring**	**Implementation Responsibility**	**Frequency**	**Performance Indicator**
			accidents which may occur. · Care must be taken to ensure that bulky or dangerous materials are secured when transporting them along the roads / pedestrian walkways. · A traffic control flag person must be appointed to direct traffic. · The appropriate Personal Protective Equipment (PPE) must be used at all times by site staff and visitors to the site; · Ensure that an adequately stocked First Aid kit is available on-site. · In the event of an emergency, the relevant emergency services must be contacted. · The contact details of all local				

CONSTRUCTION PHASE							
Aspect	**Potential Impact**	**Activity**	**Mitigation Measure (Objective and Target)**	**Method of Monitoring**	**Implementation Responsibility**	**Frequency**	**Performance Indicator**
			emergency personnel (e.g., hospitals, ambulances, police, firefighters) must be placed on the campsite notice board and communicated to all workers onsite. · The Contractor must assess the location and state of the existing services prior to any excavations to prevent possible damage to such services, (e.g., sewage pipelines that may cause water contamination and electrical wiring which may lead to possible fires). · Construction works should be limited to working hours to limit nuisance to the surrounding communities. · Transportation of materials to				

CONSTRUCTION PHASE							
Aspect	**Potential Impact**	**Activity**	**Mitigation Measure (Objective and Target)**	**Method of Monitoring**	**Implementation Responsibility**	**Frequency**	**Performance Indicator**
			the site should be done outside peak hours to limit traffic congestion. · The Contractor must supply his own security arrangements for the construction camp to safeguard materials and security of workers. · Twenty-four-hour (24hr) security at the campsite and construction areas must be ensured. · The campsite entrance and exit gates must be illuminated at night. ·Limit access to the construction campsite only to the workforce and authorised visitors. · Do not allow the movement of				

CONSTRUCTION PHASE							
Aspect	**Potential Impact**	**Activity**	**Mitigation Measure (Objective and Target)**	**Method of Monitoring**	**Implementation Responsibility**	**Frequency**	**Performance Indicator**
			public within the development site by posting notices at the entrance gates.				
Heritage Resources	The disturbance or damage of cultural, heritage and or paleontological artifacts.	Clearing and grubbing of the site Drilling Excavations	**Objectives:** To prevent damage to heritage objects and to ensure a procedure is in place, in the case of discovery of heritage or paleontological findings. **Measures:** · The protection of heritage resources should be included in the environmental induction and toolbox talks. · Should any cultural, archaeological or paleontological artefacts /objects or evidence be discovered during construction,	Daily inspections by the DEO Monthly audit by ECO.	DEO and ECO	On-going	Preservation of cultural and heritage artifacts. Proper procedure followed should any object or artefact be discovered during construction.

CONSTRUCTION PHASE							
Aspect	**Potential Impact**	**Activity**	**Mitigation Measure (Objective and Target)**	**Method of Monitoring**	**Implementation Responsibility**	**Frequency**	**Performance Indicator**
			the Contractor should cease work in the vicinity of the artefact/object and inform the ECO who will in turn inform the relevant specialists and authorities. · Site staff is not allowed to collect or keep artefact or object of cultural, archaeological or paleontological significance.				
Dust nuisance	Construction activities will typically lead to dust generation, which will	Excavations, drilling, stockpiling, construction vehicle movements transportation and spoiling of materials	**Objective:** To limit the generation of dust and where needed mitigate dust nuisance. **Measures**: · All vehicles transporting material that can be blown off (e.g., soil, rubble etc.) must be	Daily inspection by DEO. Recording of public complaints regarding dust generation in Complaints Register, that	DEO and ECO	On-going	Dust suppression is implemented where necessary. No public complaints

CONSTRUCTION PHASE							
Aspect	**Potential Impact**	**Activity**	**Mitigation Measure (Objective and Target)**	**Method of Monitoring**	**Implementation Responsibility**	**Frequency**	**Performance Indicator**
	therefore become a nuisance to the surrounding landowners and vehicles traveling on nearby roads.		covered with a tarpaulin, and speed limits of 40km/h must be adhered to on dirt roads. · Limit the height of stockpiles which can easily be blown by wind to 1m. · Where the above-mentioned cannot be achieved, cover stockpiles consisting mostly of fine material with shade cloth or a similar acceptable cover. · Prevent earthworks during windy conditions (i.e., winds above 40 km/h) where possible. · Limit construction vehicle speeds on gravel roads to 40 km/h. · Where dust poses a notable health and/or safety hazard,	will be audited by the ECO.			are received regarding dust nuisance and/or health and safety hazard.

CONSTRUCTION PHASE							
Aspect	**Potential Impact**	**Activity**	**Mitigation Measure (Objective and Target)**	**Method of Monitoring**	**Implementation Responsibility**	**Frequency**	**Performance Indicator**
			implement a dust suppression schedule. · Ensure that dust suppression schedule is maintained over weekends and holidays where a dust nuisance could pose a health and/or safety hazard to the public. · A record of any public/community complaints regarding dust nuisance must be kept in the complaints register and a record of the measures taken to address them. · Where dust generation leads to/results in a complaint by the public or landowners, the ECO reserves the right to suspend or partially suspend work on-				

CONSTRUCTION PHASE							
Aspect	**Potential Impact**	**Activity**	**Mitigation Measure (Objective and Target)**	**Method of Monitoring**	**Implementation Responsibility**	**Frequency**	**Performance Indicator**
			site until the source of dust is identified and mitigated. · Vehicles travelling to and from the site must adhere to speed limit of 40km/hour on dirt road to prevent producing excessive dust. · Vehicles transporting fine material must be covered. · The NEMAQA: National Dust Control Regulations must be adhered to at all times.				
Noise	Typical construction activities can lead to excessive noise which	Overall construction activities. Use of machinery and construction equipment.	**Objectives:** · Manage the level and duration of excessive noise generated from construction activities and prevent resultant public complaints. · Ensure that sensitive receptors are notified in	Daily monitoring Recording of public complaints regarding noise generation in Complaints	Contractor, DEO and ECO	On-going	No public complaints are received regarding noise generation and/or health and safety

CONSTRUCTION PHASE							
Aspect	**Potential Impact**	**Activity**	**Mitigation Measure (Objective and Target)**	**Method of Monitoring**	**Implementation Responsibility**	**Frequency**	**Performance Indicator**
	could cause a disturbance or nuisance to residents and the general public.		advance where excessive noise cannot be prevented for a certain period or activity (e.g., scheduled blasting). · Points of ingress and egress on to public roads must be cleared of mud and dust on a regular basis. **Measures:** · Ensure equipment and vehicles are properly maintained/ serviced and in good working condition. · Construction workers must wear earplugs where noise levels exceed 8dB. · Limit working hours with noisy equipment to weekdays between 07H00 and 18H00. · Record and address any	Register.			hazard.

CONSTRUCTION PHASE							
Aspect	**Potential Impact**	**Activity**	**Mitigation Measure (Objective and Target)**	**Method of Monitoring**	**Implementation Responsibility**	**Frequency**	**Performance Indicator**
			public/community complaints regarding noise generation in the Complaints Register. · Request formal approval of extension of working hours prior to implementing extended hours or working over weekends. · The contractor must comply with the Noise Control Regulation. · Residents are to be given at least three days warning prior to any blasting, piling or other excessively loud activities take place. · Construction workers are prohibited from loitering and entering private properties in the vicinity of construction site.				

CONSTRUCTION PHASE							
Aspect	**Potential Impact**	**Activity**	**Mitigation Measure (Objective and Target)**	**Method of Monitoring**	**Implementation Responsibility**	**Frequency**	**Performance Indicator**
			· Construction workers must conduct themselves in an orderly manner and not make excessive noise				
Waste management	Visual impact due to waste accumulating / littering; Injury or death to animals; Health and safety hazard to people; Soil and groundwat	Construction activities	**Objectives:** To prevent littering and to ensure that waste is correctly stored on-site and disposed of off-site. Protect the environment. **Measures** **General/ domestic** · Waste must not be buried or burned on-site. · Refuse bins must be placed outside the watercourse and its buffer zones or other sensitive areas. · Adequate number refuse bins should be provided and	Daily inspection of construction areas by DEO for any litter/waste. Weekly checking of waste storage area to ensure timeous removal of waste off-site. Proof of safe disposal filed in Environmental File and	Contractor, DEO and ECO	On-going	No waste disposed of or burned on-site. No visible littering. Waste transport does not result in waste being blown from the vehicle along the route. Appropriate

CONSTRUCTION PHASE							
Aspect	**Potential Impact**	**Activity**	**Mitigation Measure (Objective and Target)**	**Method of Monitoring**	**Implementation Responsibility**	**Frequency**	**Performance Indicator**
	er pollution if ablution facilities are leaking/ overflowing Soil and water contamination through hazardous substances spillages		emptied weekly at registered landfill site. · Domestic waste must be transported using an appropriate vehicle with containers/refuse, bags secured and/or covered to prevent waste being blown from the vehicle during transportation. · Refuse bins must be placed at strategic points where construction is taking place. · All litter generated on-site must be stored in closed containers and collected regularly as litter can pose a threat to fauna. · The Contractor shall ensure that general waste is not	audited monthly by ECO.			and separate storage of different types of waste in approved locations. Proper record keeping of hazardous waste generated and safe and legal disposal thereof.

CONSTRUCTION PHASE							
Aspect	**Potential Impact**	**Activity**	**Mitigation Measure (Objective and Target)**	**Method of Monitoring**	**Implementation Responsibility**	**Frequency**	**Performance Indicator**
			contaminated with hazardous waste thereby generating larger volumes of hazardous waste requiring disposal at a hazardous waste landfill site. · The piling of any material that could rot and release unpleasant smells into the air will not be allowed. · The feeding of or leaving food for stray or other animals in the area is strictly prohibited. · The DEO should do a daily inspection/walkthrough of the construction areas and ensure that it is litter-free. · Waste must be minimised as far as it is possible through the recycling and or reusing of certain items (e.g., wastepaper				

CONSTRUCTION PHASE							
Aspect	**Potential Impact**	**Activity**	**Mitigation Measure (Objective and Target)**	**Method of Monitoring**	**Implementation Responsibility**	**Frequency**	**Performance Indicator**
			from the campsite office and/or plastic containers) **<u>Hazardous waste</u>** · Separate marked bins/containers must be provided for hazardous substances. · Skips must be provided for storage of building rubble, once they are full, building rubble should be disposed of at a registered landfill site. · Residue oils and or lubricants must not leak from the designated waste bins and skips. · Both the skip and hazardous waste bins must be emptied when full.				

CONSTRUCTION PHASE							
Aspect	**Potential Impact**	**Activity**	**Mitigation Measure (Objective and Target)**	**Method of Monitoring**	**Implementation Responsibility**	**Frequency**	**Performance Indicator**
			· Hazardous waste must be disposed of at a suitable landfill or collected by an approved service provider. · Proof of safe transfer/disposal should be filed for record-keeping. **<u>Wastewater</u>** · All contaminated water flowing from batching area shall not be discharged into the environment, especially not into the watercourse. · Wastewater must be reused as far as possible. · Potential leakages of pipes relaying wastewater must be monitored on a weekly basis. If leakages are observed, they				

CONSTRUCTION PHASE							
Aspect	**Potential Impact**	**Activity**	**Mitigation Measure (Objective and Target)**	**Method of Monitoring**	**Implementation Responsibility**	**Frequency**	**Performance Indicator**
			must be sealed immediately. · Wastewater must be collected and disposed of appropriately based on its contents.				

Table 3: Operational Phase-Impact Management and Actions

OPERATIONAL PHASE							
Aspect	**Potential Impact**	**Activity**	**Mitigation Measure (Objective and Target)**	**Method of Monitoring**	**Implementation Responsibility**	**Frequency**	**Performance Indicator**
Fauna and flora	Fire risks	Operation and maintenance	To prevent any fire hazards		Maintenance workers		No fire hazards during maintenance work
Waste disposal	Pollution	Operation and maintenance	**Objectives:** To prevent pollution **Measures:** No waste material shall at any stage be disposed of in Public Open Space, the nature		Contractor Maintenance workers		No pollution

OPERATIONAL PHASE							
Aspect	**Potential Impact**	**Activity**	**Mitigation Measure (Objective and Target)**	**Method of Monitoring**	**Implementation Responsibility**	**Frequency**	**Performance Indicator**
			reserve, heritage resources or adjacent properties during maintenance work.				
Eventual project failure	Project failure	Operation	Successful project Establishment Routinely audit the works and adjust maintenance schedule accordingly.		Maintenance team	Continuous	No project failure

Table 4: Rehabilitation Phase-Impact Management and Actions

REHABILITATION PHASE							
Aspect	**Potential Impact**	**Activity**	**Mitigation Measure (Objective and Target)**	**Method of Monitoring**	**Implementation Responsibility**	**Frequency**	**Performance Indicator**
Soil Surface and Ground water, Biodiversity.	Poor rehabilitation can often lead to secondary impacts	Decommissioning Backfilling and Re-vegetation	**Objectives:** ·To ensure that bare soils are adequately revegetated. · Return the surrounding areas to their original or better state.	The ECO shall conduct monthly inspections of rehabilitated areas for the	Contractor, DEO and ECO	On-going	All areas that were stripped of vegetation are stable with no sign of slope failure

REHABILITATION PHASE							
Aspect	**Potential Impact**	**Activity**	**Mitigation Measure (Objective and Target)**	**Method of Monitoring**	**Implementation Responsibility**	**Frequency**	**Performance Indicator**
	such as erosion invasion of alien species and decreased biodiversity.		· Prevent the invasion of alien species. · Prevent secondary impacts such as erosion during the operational phase. **Measures:** · All disturbed areas shall be rehabilitated once work has been completed and before the team leaves the site. This includes closure and rehabilitation of temporary access routes and the camp site. · All foreign material not utilised in the rehabilitation activities shall be removed from the site. · Re-vegetation of all exposed soils, and	first three months and then continue with inspections on a quarterly basis until the end of the contract period. The ECO should audit the site at the end of the Contractor's retention period to establish whether rehabilitation has been			or erosion. The growth of indigenous plants and grass on rehabilitated areas. No soil erosion or sedimentation. The construction-site is left in a clean and tidy state. The Construction area and its surroundings have, as far as possible, been rehabilitated

REHABILITATION PHASE							
Aspect	**Potential Impact**	**Activity**	**Mitigation Measure (Objective and Target)**	**Method of Monitoring**	**Implementation Responsibility**	**Frequency**	**Performance Indicator**
			measures to address any potential erosion risk shall be done before the team leaves the site. · The eradication of invasive alien plants shall be undertaken. · All disturbed areas must be re-vegetated with local indigenous vegetation suitable to the area. · An active campaign for controlling new exotic and alien vegetation must be implemented within the disturbed areas. · Ensure that sufficient topsoil is available through proper removal, stockpiling and maintenance procedures during site	successfully carried out.			to their original state. No invasion of alien species.

REHABILITATION PHASE							
Aspect	**Potential Impact**	**Activity**	**Mitigation Measure (Objective and Target)**	**Method of Monitoring**	**Implementation Responsibility**	**Frequency**	**Performance Indicator**
			preparations. · All waste and construction debris must be collected and removed from all working areas. · All spoil and excess material and campsite infrastructure must be removed from the site. All spills and waste concrete must be removed. · All temporary markings and site demarcations must be removed. · All temporary construction signage must be removed. · Local indigenous grasses shall be used for the re-vegetation of the site. · Hydroseeding must be used to re-vegetate steep				

REHABILITATION PHASE							
Aspect	**Potential Impact**	**Activity**	**Mitigation Measure (Objective and Target)**	**Method of Monitoring**	**Implementation Responsibility**	**Frequency**	**Performance Indicator**
			bare slopes. · Where temporary access roads cut across contours, diversion berms should be constructed at 30m intervals to prevent erosion and concentration of runoff prior to hydroseeding. · Excavated material must be backfilled in the order in which it was removed. · Compacted soil shall be scarified prior to topsoil and seed application. · Where the Contractor failed to manage topsoil properly, the Contractor must source topsoil of similar quality off-site or remediate compromised topsoil by using compost,				

REHABILITATION PHASE							
Aspect	**Potential Impact**	**Activity**	**Mitigation Measure (Objective and Target)**	**Method of Monitoring**	**Implementation Responsibility**	**Frequency**	**Performance Indicator**
			fertiliser and seeding as agreed by the ECO. · Special care must be taken where rehabilitation occurs across several wetland zones and or crossings. · Seeding/re-seeding should, where possible, be timed to take advantage of the rainy season. · Slopes of 1:2 and 1:1 shall be stabilised by means of suitable geotextiles, hard structures or any other means as approved by the ECO. · Should the reshaping of watercourse banks be required, it should match the natural preconstruction geomorphology and slope				

REHABILITATION PHASE							
Aspect	**Potential Impact**	**Activity**	**Mitigation Measure (Objective and Target)**	**Method of Monitoring**	**Implementation Responsibility**	**Frequency**	**Performance Indicator**
			structure. · Extensive re-shaping of watercourse banks (and beds if applicable) shall be done under close supervision of the ECO or relevant specialist. · Areas where sods, plugs or seeds have been used as part of soil stabilisation measures should be watered at least every third day for a minimum period of 6 weeks unless the area is in a permanently wet zone i.e., no watering required. · The Contractor shall notify the ECO once rehabilitation in an area has been completed. · The ECO shall be responsible for the				

REHABILITATION PHASE							
Aspect	**Potential Impact**	**Activity**	**Mitigation Measure (Objective and Target)**	**Method of Monitoring**	**Implementation Responsibility**	**Frequency**	**Performance Indicator**
			technical (not contractual) sign-off of the rehabilitated works. · Only once the rehabilitation has been approved by the ECO may the contractual sign-off effected.				

1.1 Review of the EMP

The Environmental Management Plan should be reviewed at regular intervals as a matter of course and when particular events occur that trigger a review, such as a new facility manager or new activity taking place at the site. Based on observations during site inspections and issues raised at site meetings, the DEO/ ECO will determine whether any procedures require modification to improve the efficiency and applicability of the EMP on site.

Any such changes or updates will be registered in the DEO's record, as well as being included as an annexure to this document. Annexures of this nature must be distributed to all relevant parties.

1.2 Environmental Monitoring

The successful implementation of impact mitigation measures to reduce adverse impacts on the environmental conditions needs to be ensured by a proper monitoring programme. This programme should include:

- Establishing a baseline of pre-construction site conditions validated with photographic evidence.
- Monthly environmental management inspections and legal compliance audits will be conducted by an independent ECO. Inspection and compliance audit reports will be produced and made available to Ubuntu Local Municipality. These reports will include findings, observations, mitigation measures to limit negative impacts, as well as recommendations. Photographic evidence will be included in the reports.
- The Contractor must be held liable for all unnecessary damage to the environment. A register must be kept of all complaints from the community. All complaints / claims must be handled immediately to ensure timeous rectification / payment by the responsible party.

Monitoring of the general adherence to the EMP shall be the responsibility of the ECO. Reporting on adherence/ compliance to the stipulations as communicated to contractors, shall take place during scheduled site meetings.

1.3 Education and Awareness

Training and awareness regarding environmental management shall be provided to all employees and contractors as part of the toolbox talks or on-site awareness sessions by an DEO. The following objectives can be implemented:

- To inform and educate the Contractors and all project stakeholders about the basic matters of environmental awareness and energy efficiency;
- The impact of spillages and the clean up there off;
- How to avoid spillages;
- Contamination due to poor maintenance of equipment and how it can impact the environment and human health;
- To look at handling of waste as a "precautionary measure" with regards to the "Do's and Don'ts" of waste handling; and
- Ensuring waste Contractors and project stakeholders are skilled to manage waste disposal on site.

The Contractor must monitor the performance of construction workers to ensure that the points relayed during their introductory environmental training have been properly understood and are being followed. If necessary, the DEO should further explain aspects of environmental or social behaviour that are unclear. Toolbox talks should be conducted at the site prior to the commencement of work and run on a regular basis.

1.4 Record Keeping

The success of the Environmental Management Plan is determined by measuring criteria such as the environmental performance at the construction site. Recorded data can indicate the effect of training and education, or the need for education.

It will provide trends and benchmarks for setting goals and standards. It will provide clear evidence of the success or otherwise of the plan.

- Documentation (internal and external audit reports, inspection reports, waste certificate of issue or safe disposal) must be kept.
- Environmental management must form part of the monthly reporting requirements.

All records need to be provided to Ubuntu Local Municipality on a monthly basis. Ubuntu Local Municipality should safely keep these records for auditing purposes.

Continuous monitoring of the Contractor's adherence to the EMP is required. The DEO should document the nature and magnitude of the non-compliance in a designated register, the action taken to discontinue the non-compliance, the action taken to mitigate its effects and the results of the actions. The non-compliance should be documented and reported to Project Manager in the monthly report. These reports must be made available to authorities when requested.

Digital photographic record will be kept. The photographic record will be used to show before, during and post rehabilitation evidence of the project as well used in cases of damages claims if they arise. Each image must be dated and a brief description note attached.

1.5 Compliance with the EMP

A copy of the EMP must be kept on site at all times during the construction period. The EMP will be binding on all contractors operating on the site and must be included within the Contractual Clauses.

The contractors must act immediately when notice of non-compliance is received and take corrective action.

1.6 Emergency Preparedness

Environmental emergency procedures must be compiled and maintained to ensure that there are appropriate responses to unexpected or accidental actions or incidents that will cause environmental impacts, throughout the construction period. Such activities may include, *inter alia*:

- Accidental wastewater discharges to water and land.
- Accidental fires.
- Accidental spillage of hazardous substances.
- Specific environmental and ecosystem effects from accidental releases or incidents.

These plans should include:

- Emergency organisation (manpower) and responsibilities, accountability and liability.
- A list of key personnel and contact details.

- Details of emergency services available (e.g., the fire department, spill clean-up services, etc.).
- Internal and external communication plans, including prescribed reporting procedures where required by legislation.
- Actions to be taken in the event of different types of emergencies.
- Incident recording, progress reporting and remediation measures required to be implemented.
- Information on hazardous materials, including the potential impact associated with each, and measures to be taken in the event of accidental release.
- Training plans, testing exercises and schedules for effectiveness.

The Contractor must comply with the emergency preparedness and accident-reporting requirements, as required by the Occupational Health and Safety Act (No. 85 of 1993), the NEMA (No. 107 of 1998) and the National Water Act (No. 36 of 1998) as amended and any other relevant legislation.

1.7 Incident Reporting and Remedy

The DEO is required to maintain an up-to-date and current Environmental Incident Log (environmental diary). The Environmental Incident Log is a means to record all environmental incidents and/or all non-compliance notice would not be issued. An environmental incident is defined as:

- Any deviation from the listed impact management actions (listed in this EMP) that may be addressed immediately by the ECOs. (For example, a contractor's staff member littering or a drip tray that has not been emptied);
- Any environmental impact resulting from an action or activity by a contractor in contravention of the environmental stipulations and guidelines listed in the EMP which as a single event would have a minor impact but which if cumulative and continuous would have a significant effect (for example no toilet paper available in the ablutions for an afternoon); and
- General environmental information such as road kills or injured wildlife.

The ECOs are to record all environmental incidents in the Environmental Incident Log. All incidents regardless of severity must be reported to the Developer. The Log is to be kept in the EMP file and at a minimum the following will be recorded for each environmental incident:

- The date and time of the incident;
- Description of the incident;
- The name of the Contractor responsible;
- The incident must be listed as significant or minor;
- If the incident is listed as significant, a non-compliance notice must be issued, and recorded in the log;
- Remedial or corrective action taken to mitigate the incident; and
- Record of repeat minor offences by the same contractor or staff member.

If a significant leakage or spillage of hazardous substances occurs on site, the local emergency services must be immediately notified of the incident. The following information must be provided, namely; the location; the nature of the load; the extent of the impact; and the status at the site of the accident itself (i.e. whether further leakage is still taking place, whether the vehicle or the load is on fire).

Written records must be kept on the corrective and remedial measures decided upon and the progress achieved therewith over time. The written reports may be used for training purposes in an effort to prevent similar future occurrences.

1.8 Complaints Register

The contractor's DEO shall keep a current and up-to-date complaints register. The complaints register is to be a record of all complaints received from communities, stakeholders and individuals. The Complaints Record shall:

- Record the name and contact details of the complainant;
- Record the time and date of the complaint;
- Contain a detailed description of the complaint;
- Where relevant and appropriate, contain photographic evidence of the complaint or damage (DEO to take relevant photographs); and
- Contain a copy of the DEO's written response to each complaint received and keep a record of any further correspondence with the complainant. The DEO's written response will include a description of any corrective action to be taken and must be signed by the Contractor, and affected party.

1.9 Interactions with Communities and Interested and Affected Parties

Open, transparent and good relations with communities and interested and affected parties are an essential aspect to the successful management and mitigation of environmental impacts.

The contractor's DEO shall:

- Ensure that all queries, complaints and claims are dealt within an agreed timeframe;
- Ensure that any or all agreements are documented, signed by all parties and a record of the agreement kept in the EMP file;
- Ensure that a complaints telephone numbers are made available to all landowners and affected parties; and
- Ensure that contact with affected parties is courteous at all times;

2. CLOSURE PLANNING – CONSTRUCTION

Final site cleaning - the contractor must clear and clean the site and ensure that all equipment and residual materials not forming part of the permanent works is removed from site before issuing the completion certificate or as otherwise agreed.

Rehabilitation - the contractor must be responsible for rehabilitating and re-vegetation of all areas disturbed/areas earmarked for conservation during construction to the satisfaction of the engineer and ECO.

2.1 Post Construction Audit

A post-construction audit must be carried out and submitted to authorities on request. Objectives should be to audit compliances with the key components of the EMP, to identify main areas requiring attention and recommend priority actions.

3. RECOMMENDATIONS AND CONCLUSION

According to NEMA, everyone is required to take reasonable measures to ensure that they do not pollute the environment. Reasonable measures include informing

and educating employees about the environmental risks of their work and training them to operate in an environmentally responsible manner. If the abovementioned environmental management recommendations are adopted, it is anticipated that the majority of negative environmental impacts caused by improper management of the of activities at the site can be mitigated.
Recommendations to ensure that the environment, during the construction phases of the Babatas project site development is properly managed, are as follows:

- The EMP should be seen as a day-to-day management document, which sets out the environmental and social standards, which would be required to minimise the negative impacts and maximise the positive benefits of the project activities.
- All attempts should be made to have this EMP available, as part of any tender documentation, so that the Contractors are made aware of the potential cost and timing implications needed to fulfil the implementation of the EMP, thus adequately costing for these.
- Waste minimisation is recommended since it reduces removal and transport costs.
- Recycling should form an integral part of the waste management during the construction and operational phase.
- Regular inspections and compliance audits must be conducted by an independent ECO, to ensure that the environmental management procedures are adhered to and that the working areas at project site be kept clean.
- Monthly inspection and legal compliance reports should be made available during the construction phase.

agriculture, environmental affairs,
rural development and land reform

Department:
agriculture, environmental affairs,
rural development and land reform .
NORTHERN CAPE PROVINCE
REPUBLIC OF SOUTH AFRICA

SASKO Building
90 Long Street
Private Bag X6102
Kimberley
8300

Tel. 053-8077300
Fax: 053-8077328

Enquiries :
Dipatlisiso : Mr I Gwija
Imibuzo :
Navrae :

Reference : NC/BA/15/PIX/UBU/VIC1/2021
Tshupelo
Isalathiso :
Verwysing :

Date :
Leshupelo:
Umhla : 22nd March 2022
Datum :

UBUNTU LOCAL MUNUCIPALITY
Mr. SS Ngwevu
76 Church street
VICTORIA WEST
7070

Telephone: (053) 6210026

Dear Sir/Madam

THE GRANTING OF AN ENVIRONMENTAL AUTHORISATION FOR: ACTIVITY NO.9 AND ACTIVITY NO.13, GN. R 327, OF APRIL 2017(AS AMENDED): THE PROPOSED UPGRADING OF GROUNDWATER SUPPLY, DRILLING OF BOREHOLES, STORAGE AND CONSTRUCTION OF A NEW PIPELINES IN VICTORIA WEST: UBUNTU LOCAL MUNICIPALITY, PIXLEY KA SEME DISTRICT, MUNICIPALITY, NORTHERN CAPE.

By virtue of power conferred to me by the National Environmental Management Act, 1998 (Act No. 107 of 1998) and the Environmental Impact Assessment Regulations, 2014**: ACTIVITY NO.9 AND ACTIVITY NO.13, GN. R 327, OF APRIL 2017(AS AMENDED): THE PROPOSED UPGRADING OF GROUNDWATER SUPPLY, DRILLING OF BOREHOLES, STORAGE AND CONSTRUCTION OF A NEW PIPELINES IN VICTORIA WEST: UBUNTU LOCAL MUNICIPALITY, PIXLEY KA SEME DISTRICT, MUNICIPALITY, NORTHERN CAPE.**

A detailed description of the activity is given in the amendment application **OCTOBER 2021** subject to the conditions listed in the Environmental Authorisation and reasons for the decision are attached herewith. In terms of regulation 4 (2) of the Environmental Impact Assessment Regulations, 2014, you are instructed to notify all registered interested and affected parties, in writing and within fourteen (14) days of receiving of this letter, of the Department's decision in respect of your application as well as the provisions regarding the making of appeals that are provided for in the regulations.

Your attention is drawn to chapter 2 of the National Appeal Regulation which regulates appeal procedures. Should you/ any person affected by this decision wish to appeal, any aspect as

prescribed in regulation 4 of the National Appeal Regulations 2014, with the Member of the Executive Council, Ministry of Agriculture, Environmental Affairs, Rural Development & Land Reform within 20 days of receiving this letter, by means of one of the following methods:

By facsimile:	(053) 8077328
By post:	Private Bag X 6102, Kimberley, 8300 or
By hand:	90 Long Street, Kimberley, 8300

Should you decide to appeal, you must serve a copy of your notice of intention to appeal on all registered interested and affected parties as well as a notice indicating where, and for what period, the appeal submission will be available for inspection.

Yours Faithfully

MR. B FISHER: DIRECTOR
ENVIRONMENTAL QUALITY MANAGEMENT
DEPARTMENT OF AGRICULTURE, ENVIRONMENTAL AFFAIRS,
RURAL DEVELOPMENT & LAND REFORM

DATE OF DECISION: 25·3·2022

Cc: **Thandiwe Notshe**
IXENGINEERS (PTY) LTD
Thandiwe.n@ixengineers.co.za

agriculture, environmental affairs,
rural development and land reform

Department:
agriculture, environmental affairs,
rural development and land reform .
NORTHERN CAPE PROVINCE
REPUBLIC OF SOUTH AFRICA

ENVIRONMENTAL AUTHORISATION

in terms of National Environmental Management Act, 1998 (Act No. 107 of 1998) and the Environmental Impact Assessment Regulations, 2014, as amended.

Authorisation Register Number:	**PERMIT 06/2022**
Reference Number:	**NC/BA/15/PIX/UBU/VIC1/2021**
Last Amended:	**N/A**
Holder of Authorisation:	**UBUNTU LOCAL MUNICIPALITY**
Location of activity:	**ERF 1, VICTORIA WEST, UBUNTU LOCAL MUNICIPALITY, PIXLEY KA SEME DISTRICT MUNICIPALITY, NORTHERN CAPE.**

DEFINITIONS

"Activity" means an activity identified in any notice published by the Minister or MEC in terms of section 24D (1) (a) of the Act as a listed activity or specified activity;

"Proponent" means a person intending to submit an application for environmental authorisation and is referred to as an applicant once such application for environmental authorisation has been submitted;

"Application" means an application for an -

(a) environmental authorization in terms of Chapter 4 of the 2014 Environmental Impact Assessment regulations;

(b) amendment to an environmental authorisation in terms of Chapter 5 of the 2014 Environmental Impact Assessment regulations;

(c) amendment to an EMPr in terms of Chapter 5 the 2014 Environmental Impact Assessment regulations;

(d) amendment of a closure plan in terms of Chapter 5 of the 2014 Environmental Impact Assessment regulations;

"Basic Assessment Report" means a report contemplated in regulation 19 of the 2014 Environmental Impact Assessment regulations;

"Environmental Impact Assessment Report" means a report contemplated in regulation 23 of the 2014 Environmental Impact Assessment regulations;

"Plan of Study for Environmental Impact Assessment" means a study contemplated in regulation 22 which forms part of a scoping report and sets out how an environmental impact assessment will be conducted;

"Scoping Report" means a report contemplated in regulation 21 of the 2014 Environmental Impact Assessment regulations;

"EAP" means an Environmental Assessment Practitioner as defined in section 1 of the Act;

"EMPr" means an environmental management programme contemplated in regulations 19 and 23 of the 2014 Environmental Impact Assessment regulations;

"Registered Interested and Affected Party" in relation to an application, means an interested and affected party whose name is recorded in the register opened for that application in terms of regulation 42;

"Public Participation Process" means the process in which potential interested and affected parties are given an opportunity to comment on, or rare issues relevant to specific activity;

"Department" means the Northern Cape Department of Agriculture, Environmental Affairs, Rural Development & Land Reform.

"The Act" means the National Environmental Management Act, 1998 (Act No. 107 of 1998).

DECISION

The Department is satisfied, on the basis of information available to it and subject to compliance with conditions of this environmental authorisation, that the applicant should be authorised to undertake the activity specified below.

Details regarding the basis on which the Department reached this decision are set out in Annexure 1.

ACTIVITIES AUTHORISED

By virtue of the powers conferred on it by the National Environmental Management Act, 1998 (Act No. 107 of 1998) and the Environmental Impact Assessment Regulations, 2014, as amended, the Department hereby authorises –

Ubuntu Local Municipality
with the following contact details –

Mr. S S Ngwevu
78 Church Street
VICTORIA WEST
7070

Tell: (053) 6210 026

to undertake the following activities (hereafter referred to as "the activity")

APPLICATION FOR ENVIRONMENTAL AUTHORIZATION: THE PROPOSED UPGRADING OF GROUNDWATER SUPPLY, DRILLING OF BOREHOLES, STORAGE AND CONSTRUCTION OF A NEW PIPELINES, VICTORIA WEST, UBUNTU LOCAL MUNICIPALITY, PIXLEY KA SEME DISTRICT MUNICIPALITY, NORTHERN CAPE.

Activity No. 9 of GN. R327 of April 2017 (as amended)

The development of infrastructure exceeding 1 000 metres in length for the bulk transportation of water or storm water—

(i) with an internal diameter of 0,36 metres or more; or
(ii) (ii) with a peak throughput of 120 litres per second or more;

Activity No. 13 of GN. R327 of April 2017 (as amended)

The development of facilities or infrastructure for the off-stream storage of water, including dams and reservoirs, with a combined capacity of 50 000 cubic metres or more, unless such storage falls within the ambit of activity 16 in Listing Notice 2 of 2014

At Erf 1, Victoria West, which falls within the jurisdiction of Ubuntu Local Municipality, Pixley Ka Seme District Municipality, Northern Cape, with the following co-ordinates;

- Point 1 - 31° 26' 56.03"; 23° 07' 28.69"
- Pont 2 - 31° 24' 07.37"; 23° 05' 24.42"

Hereafter referred to as "the property".

The granting of this Environmental Authorisation is subject to the conditions set out below.

CONDITIONS

Scope of authorisation:

1. Authorisation of the activity is subject to the conditions contained in this authorisation, which conditions form part of the environmental authorisation and are binding on the holder of the authorisation.

2. The holder of the authorisation **must** be responsible for ensuring compliance with the conditions by any person acting on his or her behalf, including but not limited to, an agent, sub-contractor, employee or person rendering a service to the holder of the authorisation.

3. The activities which are authorised **must** only be carried out at the property indicated above.

4. Any changes to, or deviations from, the project description set out in this authorisation must be approved, in writing, by the Department before such changes or deviations may be effected. In assessing whether to grant such approval or not, the Department may request such information as it deems necessary to evaluate the significance and impacts of such changes or deviations and it may be necessary for the holder of the authorisation to apply for further authorisation in terms of the regulations.

5. This authorisation does not negate the holder of the authorisation's responsibility to comply with any other statutory requirements that may be applicable to the undertaking of the activities.

General conditions:

6. A copy of this authorisation must be kept at the property where the activities will be undertaken. The authorisation must be produced to any authorised official of the Department who requests to see it and must be made available for inspection by any employee or agent of the holder of the authorisation who works or undertakes work at the property.

7. Where any of the applicant's contact details change, including the name of the responsible person, the physical or postal address and/ or telephonic details, the applicant must notify the Department as soon as the new details become known to the applicant.

8. The holder of the authorisation must notify the Department, in writing and within 24 (Twenty-Four) hours, if condition 16 of this authorisation cannot be or is not adhered to. In all other cases, the holder of the authorisation must notify the Department, in writing, within seven (7) days if any condition of this authorisation is not adhered to. Any notification in terms of this condition must be accompanied by reasons for the non-compliance.

9. Non-compliance with a condition of this authorisation may result in criminal prosecution or other actions provided for in the National Environmental Management Act, 1998 and the regulations.

10. This authorization is subject to the approval by the relevant local authorities i.e. in terms of any relevant legislation administered by those local authorities.

11. The activities **must** not commence without the necessary permits/licenses/approvals and/or service agreements, where it is relevant, from or with the relevant regulatory authorities whether national, provincial or local (these include but are not limited to National Department of Forestry, Fisheries & the Environment; National Department of Agriculture, Land Reform & Rural Development; Department of Human Settlement; Department of Water & Sanitation; Department of Mineral Resources & Energy; Department of Transport; Department of Employment & Labour; Department of Public Works & Infrastructure; Department of Sports, Arts & Culture; South African Heritage Resources Agency; South African Civil Aviation Authority).

12. The activities, including site preparation, may not commence before the thirty (30) day appeal period expires or until such time as the Department has considered any appeals that have been lodged.

    a. **Seven (7) days** written notice must be given to the Department before commencement with the activity.
    b. Such notice shall make clear reference to the site location details and the reference number given above.
    c. The said notice must also include proof of compliance with the following condition described herein:
        i. Condition: 11

13. The applicable conditions of this authorization must form part of all contractors' and sub-contractors' conditions of contract. A performance-based requirement with regard to environmental impact management must be included in all contracts related to any aspect of this authorization.

14. The applicant must carry out regular environmental audits to establish compliance with the conditions of this authorization and contracts.

15. Environmental Management Inspectors employed by the Department shall be given access to the property as described above (see detailed description of the activities) for the purposes of assessing and/or monitoring compliance with the conditions contained in this Environmental Authorization. Where the activity is located on a third party's property the applicant shall be responsible to arrange access for departmental officials.

16. This Department may add to, change and/or amend any of the conditions in this authorization if, in the opinion of the Department, the addition, change of amendment is environmentally justified. In

event that such impacts exceed its significance as predicted in the independent consultant's environmental scoping report and supporting documentation, the authorization may be withdrawn after proper procedures were followed.

17. In the event of any dispute concerning the significance of a particular impact, the opinion of this department in respect of its significance will prevail.

18. This Department and any national department, provincial department, local authorities or committees appointed in terms of the conditions of this application or any other public authority or organization shall not be held responsible for any damage of losses suffered by the applicant or his successor in title in any instance where construction or operation subsequent to construction be temporarily or permanently stopped for reasons of non-compliance by the applicant with the conditions of approval as set out in this document or any other subsequent document emanating from these conditions of approval.

19. The applicant shall be responsible for all costs necessary to comply with the above conditions unless otherwise specified.

20. The applicant must apply the principle of best practicable environmental option for all technologies used/ implemented during construction and operation phase.

Appeal of authorisation:

21. In terms of Regulation 4(2) of the Environmental Impact Assessment Regulations, 2014 (the Regulations), you are instructed to notify all registered interested and affected parties, in writing and within 14 (fourteen) days of the date of the Department decision in respect of the amendment made as well as the provisions regarding the submission of appeals that are contained in the Regulations.

22. Your attention is drawn to Chapter 2 of Government Notice No. R993, which prescribes the appeal procedure to be followed.

Management of activity:

25. The Environmental Management Programme ("EMPr") submitted as part of the application for environmental authorisation must be implemented. (Alternatively, if further changes are required to the EMPr as a result of the authorisation, this condition must be modified).

26. Ensure that all "NO-GO" areas are clearly defined and adequately demarcated.

27. All works to be conducted in an environmentally sensitive manner and in accordance with the EMPr and conditions of this authorization.

Monitoring

28. The EMPr must be strictly enforced during all phases of the project.

29. Changes to the EMPr, which are environmentally defendable, must be submitted to this Department for acceptance before such changes are effected.

30. The Department reserves the right to amend the EMPr should any impacts that were not anticipated or covered in the Impact Assessment Report.

31. A storm water management plan to be implemented during the construction and operation of the facility. The plan must comply with applicable regulations and prevent off-site migration of contaminated storm water.

32. Fire management plan must be available on site at all times and employees must be made aware of the plan.

Environmental Control Officer (ECO) and Duties

33. The holder of this authorisation must appoint an independent Environmental Control Officer (ECO) with experience or expertise in the field for the construction phase of the development. The ECO will have the responsibility to ensure that the conditions referred to in this authorisation are implemented and to ensure compliance with the provisions of the EMPr.

34. The ECO must be appointed before commencement of any authorised activity.

35. The ECO must meet with the contractors to discuss the conditions of the **Environmental Authorisation** and the contents of the EMPr prior to commencement of activities.

36. Once appointed, the name and contact details of the ECO must be submitted to the Director: Compliance Monitoring of the Department.

37. The ECO must keep record of all activities on site, potential impacts, problems identified, transgressions noted and a task schedule of tasks undertaken by the ECO.

38. The ECO must remain employed until all rehabilitation measures, as required for implementation due to construction damage, are completed and the site is ready for operation.

39. Records relating to monitoring and auditing must be kept on site and made available for inspection to any relevant and competent authority in respect of this development.

40. Photographs must be taken (before, during and immediately after construction as a visual reference).

Recording and Reporting to the Department

41. The holder of this authorisation must keep all records relating to monitoring and auditing on site and make it available for inspection to any relevant and competent authority in respect of this development.

42. Records relating to compliance or non-compliance with any condition of this authorization must be kept in good order. Such records must be made available to any Official from Monitoring Compliance and Enforcement section of the Directorate: Environmental Management within seven (7) days of written request by the said Officer.

43. Any complaints regarding the said development must be brought to the attention of the Department within 24 hours after receiving the complaints; register must be kept up to date for inspection by the Department. Where any of the applicant's contact details change, including the name of the responsible person, the physical or postal address and/ or telephonic details, the applicant must notify the Department as soon as the new details become known to the applicant.

Environmental audit report

44. The holder of the authorization must submit an environmental audit report to the Department within 30 days of completion of the construction phase and within 30 days of completion of rehabilitation activities.

45. The Environmental audit report must:
    - Be compiled by an independent environmental auditor;
    - Indicate the date of the audit, the name of the auditor and the outcome of the audit in terms of compliance with the environmental authorisation conditions as well as the requirements of the EMPr.
    - Include measures to be implemented to attend to any non-compliance.
    - Include copies of any approvals granted by other authorities relevant to the department for the reporting period.
    - Highlight any outstanding environmental issues that must be addressed, along with recommendations for ensuring that they are appropriately addressed.
    - Include evidence of adherence to the conditions of this authorisation and the EMPr where relevant such as training records.

Operation of the activity

46. Seven (7) days written notice must be given to the Department that the activity will commence. Commencement for the purposes of this condition includes site preparation. The notice must include a date on which it is anticipated that the activity will commence.

47. The authorised activities must not commence before the statutory 30 days of an appeal period has expired.

48. Should you be notified by the Minister of a suspension of the authorization pending appeal procedures, you must not commence with the activities unless authorized by the Minister in writing.

49. The removal of natural vegetation and cultivation work must be restricted to the footprint of the proposed activity.

50. Environmental training must be conducted for the staff/employees before commencement of the project and environmental awareness must be given throughout the life cycle of the project. Workers should be informed that the hunting, snaring and killing of fauna is not allowed on site.

51. Measures to control the spreading of invasive alien plants must be in place and be implemented.

52. Environmental impacts must be monitored and managed effectively throughout the life cycle of the project.

53. Habitat fragmentation must be avoided.

54. Storm water measures must be implemented in order to manage storm water and to prevent erosion.

55. In the event where erosion occurs and cause environmental degradation as a result of these authorized activity, the holder of this environmental authorization must take responsibility to recover the damaged properties as soon as possible.

56. The storm water flowing out of the application site must not be contaminated by any substance, whether such substance is a solid, liquid, gas or a combination thereof.

57. Al infrastructure must be properly managed, maintained and operated throughout the life of the project.

58. Any leaks and failures of infrastructure must be fixed immediately, and areas rehabilitated as required

59. Should any archaeological remains be found on site, the South African Heritage Agency (SAHRA) must be contacted and all works must cease immediately in that area, failure to do so constitute an offence in terms of the National Heritage Resource Act, Act 25 of 1999 as amended.

60. All waste generated must be collected and be disposed-off into a licensed landfill site.

61. Vehicle repairs and repairs of any machinery must not be conducted on site.

62. The Occupational Health and Safety Act, 1993 (Act no. 85 of 1993) must be implemented by an independent Health and Safety Officer.

63. Chemical mobile toilets must be made available for workers on site, and must be safely secured to prevent them from being blown away.

64. Concrete mixing must not be done on site, a ready mix concrete must be brought into the site.

65. Inert building rubble and waste rock must be used as backfill material where possible, and/or disposed-off at a licensed landfill site.

66. The level of dust generated onsite must be kept as low as possible and must comply with the Dust Control Regulations (No. R. 827).

67. The dust suppression techniques must be properly implemented to prevent the dispersion of dust particles into the air.

68. The level of noise generated on site must be kept as low as possible and must be restricted within the normal working hours.

69. The level of noise must also comply with the Noise Control Regulations (GN R 154) as well as the acceptable day rating levels as per the SANS10103:2008 guidelines.

70. Hazardous materials must be safely stored in designated areas, with properly visible signs, in a manner that does not endanger human health or the environment.

71. The holder of this environmental authorization must take adequate precautions to ensure that open fires do not ignite as a result of works on site.

Site Closure and Decommissioning:

72. Should the proposed activity ever cease or become redundant, the applicant must undertake the required actions as prescribed by legislation at the time and comply with all relevant legal requirements administered by any relevant and competent authority.

73. The holder of this Environmental Authorization must consult with the Department prior to decommissioning of this activity.

74. All areas disturbed by the project must be rehabilitated to an acceptable condition.

DURATION AND PERIOD OF VALIDITY

This activity(s) must commence within a period of ten (10) years from the date of issue. If commencement of the activity(s) does not occur within that period and the intention is to extend the validity period of the authorization, an application for amendment to extend the validity period must be launched at least three (3) months prior to the expiry date of the validity period. If commencement of the activity does not occur within that period, the authorisation lapses and a new application for environmental authorisation must be made in order for the activity to be undertaken.

APPEAL

An appellant must submit an appeal to the appeal administrator, and a copy of the appeal to the applicant, any registered interested and affected party and any organ of state with interest in the matter within 20 days from the date that the notification of the decision was sent to the applicant by the competent authority.

Appeals must be submitted in writing to:

The Member of the Executive Council
Ministry of Agriculture, Environmental Affairs, Rural Development & Land Reform
Private Bag X6102
Kimberley
8300
Fax: (053) 832 1026

Please note that in terms of section 43(7) of the National Environmental Management Act, 1998, an appeal under section 43 of that Act will suspend the environmental authorisation or any provision or condition attached thereto. In the instance where an appeal is lodged, you may not commence with the activity until such time that the appeal is finalised.

MR. B. FISHER
DIRECTOR: ENVIRONMENTAL QUALITY MANAGEMENT
DEPARTMENT OF AGRICULTURE, ENVIRONMENTAL AFFAIRS, RURAL DEVELOPMENT & LAND REFORM

DATE OF ENVIRONMENTAL AUTHORISATION: 25 · 3 · 2022

ANNEXURE 1: REASONS FOR DECISION

1. Background

The applicant **UBUNTU LOCAL MUNICIPALITY** applied for environmental authorization to carry on the following activity –

APPLICATION FOR ENVIRONMENTAL AUTHORIZATION: THE PROPOSED UPGRADING OF GROUNDWATER SUPPLY, DRILLING OF BOREHOLES, STORAGE AND CONSTRUCTION OF A NEW PIPELINES, VICTORIA WEST, UBUNTU LOCAL MUNICIPALITY, PIXLEY KA SEME DISTRICT MUNICIPALITY, NORTHERN CAPE.

Activity No. 9 of GN. R327 of April 2017 (as amended)

The development of infrastructure exceeding 1 000 metres in length for the bulk transportation of water or storm water—

(iii) with an internal diameter of 0,36 metres or more; or
(iv) (ii) with a peak throughput of 120 litres per second or more;

Activity No. 13 of GN. R327 of April 2017 (as amended)

The development of facilities or infrastructure for the off-stream storage of water, including dams and reservoirs, with a combined capacity of 50 000 cubic metres or more, unless such storage falls within the ambit of activity 16 in Listing Notice 2 of 2014

At Erf 1, Victoria West, which falls within the jurisdiction of Ubuntu Local Municipality, Pixley Ka Seme District Municipality, Northern Cape, with the following co-ordinates;

- Point 1 - 31° 26' 56.03"; 23° 07' 28.69"
- Pont 2 - 31° 24' 07.37"; 23° 05' 24.42"

Hereafter referred to as "the property".

The applicant appointed IX ENGINEERS to undertake an Environmental Impact Assessment process. A Basic Assessment process was followed.

2. Information considered in making the decision

In reaching its decision, the Department took, *inter alia,* the following into consideration –

a) The Environmental Assessment Practitioner complied with Regulation 19 of April 2017.
b) Public participation followed is in line with Regulation 41 of April 2017 and the proof was submitted together with the Final Basic Assessment report dated October 2021.

c) The information contained in the Basic Assessment Report dated October 2021 submitted by the Environmental Assessment Practitioner.
d) The comments received from interested and affected parties as included in the Basic Assessment Report.
e) The objectives and requirements of relevant legislation, policies and guidelines, including section 2 and 23 of the National Environmental Management Act, 1998 (Act No. 107 of 1998), The Mineral and Petroleum Resources Development Act, 2002 (Act No. 28 of 2002) and the Northern Cape Conservation Act, 2009 (Act No. 9 of 2009).
f) The findings of the site visit undertaken by Mr. Isaac Gwija (Agriculture, Environmental Affairs, Rural Development & Land Reform) and the Applicant during site inspection on 09 December 2021.

3. Key factors considered in making the decision

All information presented to the Department was taken into account in the Department's consideration of the application. A summary of the issues which, in the Department's view, were of the most significance is set out below.

a) The EAP who prepared the report has the expertise to carry out the Basic Assessment procedures.
b) Impacts of the proposed activity on the receiving environment were described in terms of geographical, physical, biological, social, economic and cultural aspects.
c) Impact Assessment identified all legislation and guidelines it considered in preparing the report.
d) The EAP took into account comments from interested and affected parties and incorporated them into making the Basic Assessment report.
e) The need and desirability for the proposed activity.

4. Findings

After consideration of the information and factors listed above, the Department made the following findings -

a) The identification and assessment of impacts are detailed in the Basic Assessment Report dated October 2021.
b) The proposed mitigation of impacts identified and assessed adequately curtails the identified impacts.
c) The procedure followed for impact assessment is adequate for decision-making process.
d) All interested and affected parties had no objections to the project.

In view of the above, the Department is satisfied that, subject to compliance with the conditions contained in the environmental authorization, the proposed activity will not conflict with the general objectives of integrated environmental management laid down in Chapter 5 of the National Environmental Management Act, 1998 and that any potentially detrimental environmental impacts resulting from the proposed activity can be mitigated to acceptable levels. The application is accordingly granted.

VICTORIA WEST– UPGRADING OF GROUNDWATER SUPPLY

TENDER NO. UB/VW/19/2022

PART C5: DRAWINGS

The drawings listed below are provided in order to give an overview of the project.

Drawing No.	Title
301824-CI-DAL-001	Locality Plan
301824-CI-DRD-014	Project Name Board
301976-CI-DRD-004	Bulk Water Supply Layout
301824- CI- DRD-001-01	Details of borehole pipework and chamber sheet 1 of 4
301824-CI- DRD-001-02	Details of borehole pipework and chamber sheet 2 of 4
301824-CI- DRD-001-03	Details of borehole pipework and chamber sheet 3 of 4
301824-CI- DRD-001-04	Details of borehole pipework and chamber sheet 4 of 4
301824- CI- DRD-002-01	Details of air valve installation and chamber sheet 1 of 2
301824- CI- DRD-002-02	Details of air valve installation and chamber sheet 2 of 2
301824- CI- DRD-003	Details of scour valve installation and chamber
301824- CI- DRD-004	Details of isolation valve installation and chamber
301824- CI- DRD-005	Details of water meter and isolation valve installation and chamber
301824- CI- DRD-006-01	Water meter and control valve installation: chamber and pipework sheet 1of 2
301824- CI- DRD-006-02	Water meter and control valve: chamber and pipework sheet 2 of 2
301824- CI- DRD -008	Typical trench details
301824- CI- DRD -011	Detail of diamond mesh fence and steel gate

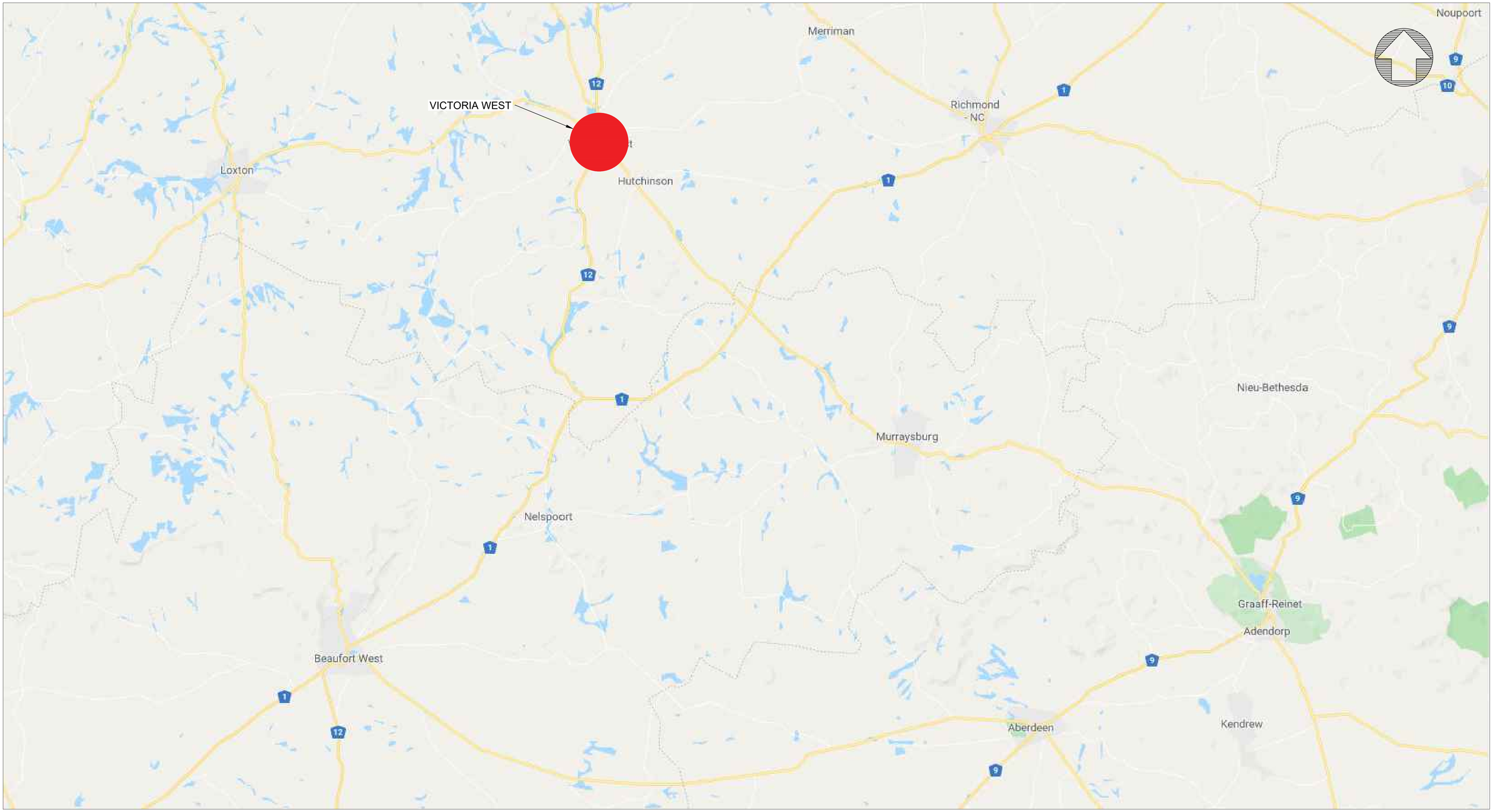

PRELIMINARY

All dimensions must be verified on site before the works commence. Refer any discrepancies to the Engineer.

P:\Proj - Active\301824 - Ubuntu Infrastructure projects\8. Drawings\3. New Drawings\301824-CI-DAL-001 - Standard\301824-CI-DAL-001.dwg

17/10/2022 3:00:58 Printed By: Ngosi Shabangu (Kimberley)

REVISION SCHEDULE

No	DATE	DESCRIPTION	DRW	CHK
A	12/06/20	PRELIMINARY DESIGN	WvS	LL
B	13/10/22	FOR TENDER	WvS	LL

CONSULTING ENGINEER

SIGNATURE	PR No	DATE

CLIENT

SIGNATURE		DATE

DESIGNED	DRAWN	CHECKED
L LOUW	W v STADEN	E SERFONTEIN

CONSULTANT

iX engineers
Infrastructure Excellence

Montrio Corporate Park | Block 3, 1st Floor North Wing | 10 Oliver Road Monument Heights | Kimberley | 8301
Tel: +27 (0) 53 830 0460 | Fax: +27 (0) 53 832 2497
www.ixengineers.co.za

CLIENT

Ubuntu Municipality

menswaardigheid • hoop • erfenis
ubuntu • dhembe • izithethe
humanity • hope • heritage

PROJECT

VICTORIA WEST
UPGRADING OF GROUND
WATER SUPPLY

DRAWING DESCRIPTION

LOCALITY PLAN

SCALE FOR REDUCED PLAN

0 5 10 20 30 40 50
50mm ON ORIGINAL PLAN

DATE	SCALE	ORIGINAL SIZE
2022/10/13	AS SHOWN	A1

DRAWING NUMBER	REV
301824-CI-DAL-001	A

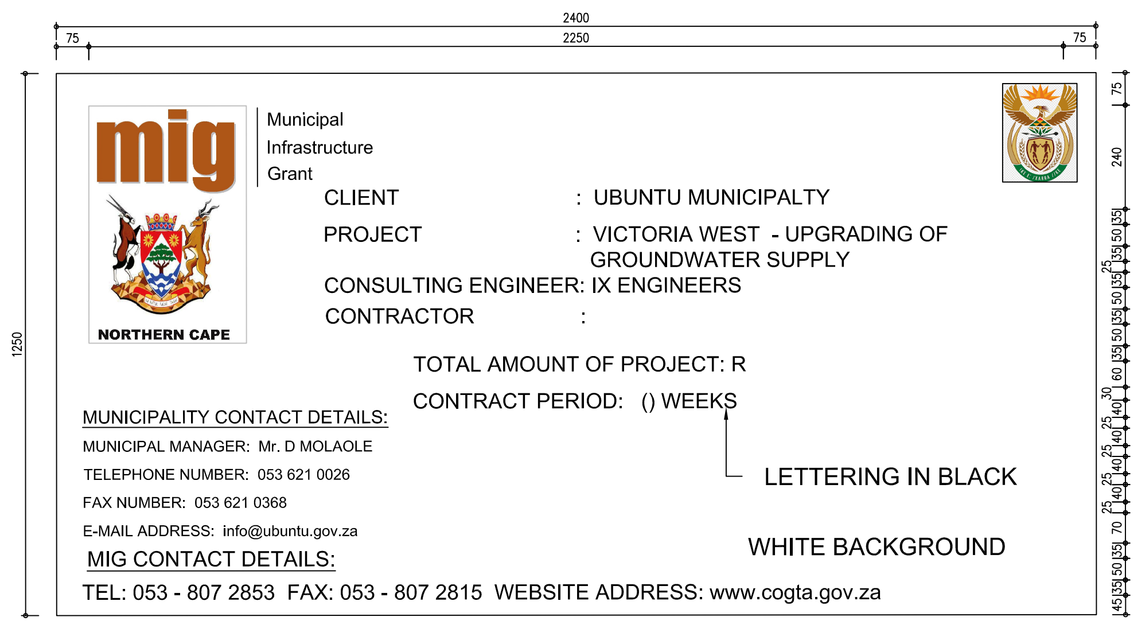

NAME BOARD : FRONT ELEVATION

SCALE 1 : 10

NOTES:

1. ALL EMBLEMS ARE TO BE OBSTAINED BY THE CONTRACTOR AND DISPLAYED IN FULL COLOUR.
2. M16 x 100mm GALV. BOLTS AND NUTS FOR FIXING OF NAME BOARD TO GALV. STEEL PIPES (FIXING DETAIL 1).
3. M16 x 100mm GALV. BOLTS AND NUTS FOR FIXING OF NAME BOARD TO GALV. STEEL PIPES (FIXING DETAIL 2).
4. LOCATION OF PROJECT NAME BOARD TO BE IN ACCORDANCE WITH THE ENGINEERS INSTRUCTION.
5. FOR FIXING DETAIL 2 THE CENTRE LINES OF THE 76mm Ø STEEL PIPES WILL BE 1200mm APART.

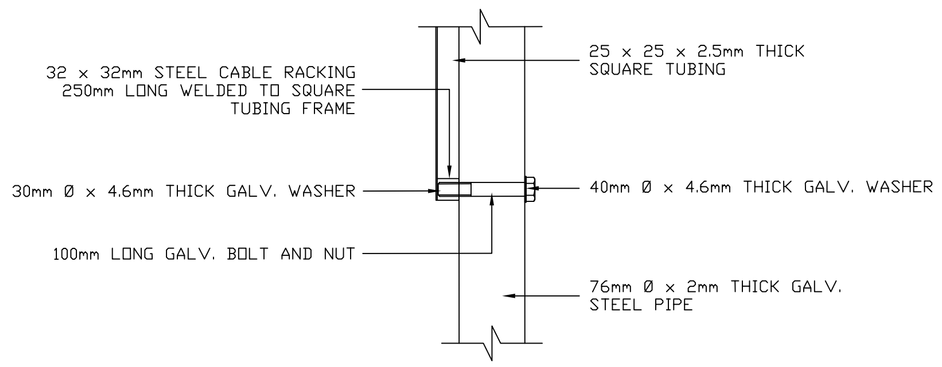

FIXING DETAIL 1

SCALE 1 : 5

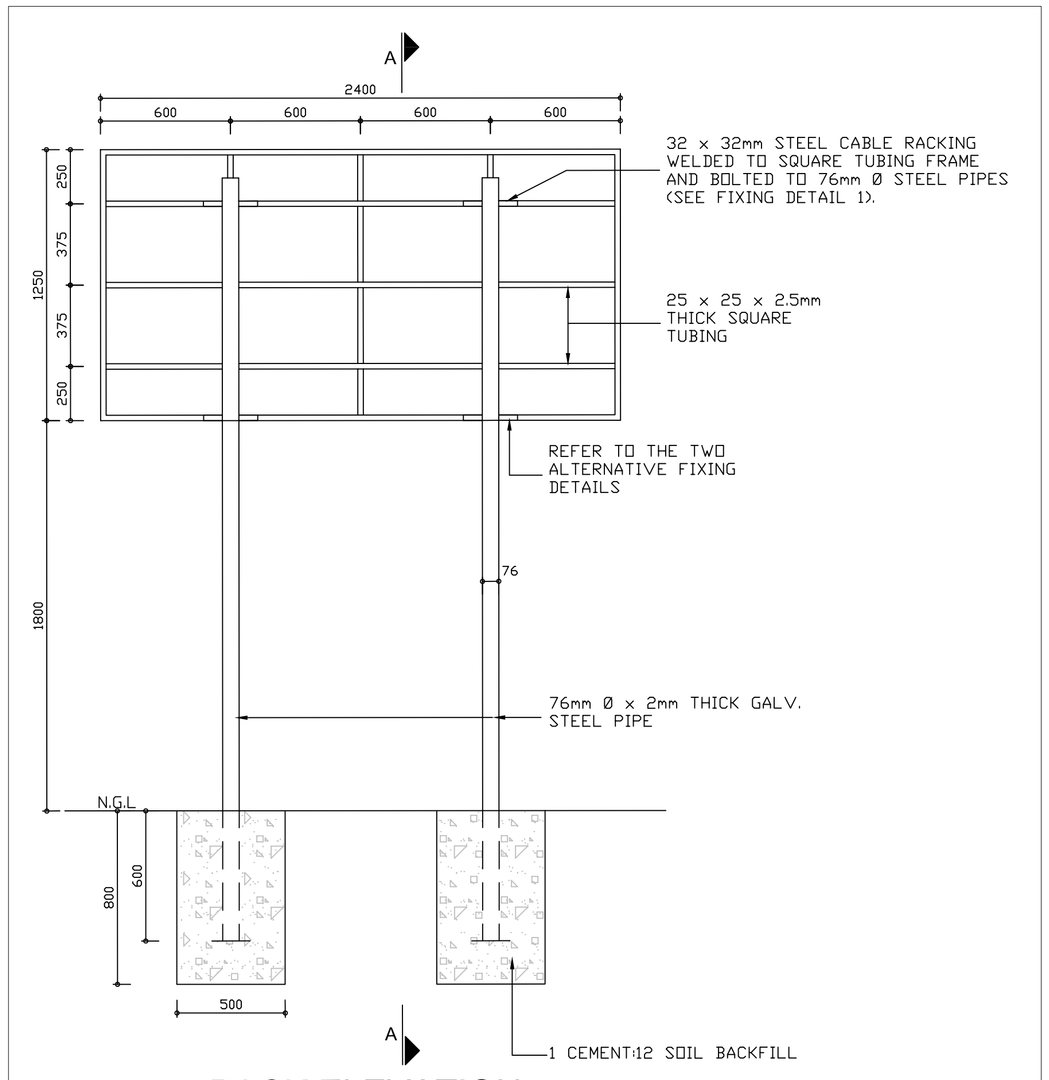

BACK ELEVATION

SCALE 1 : 20

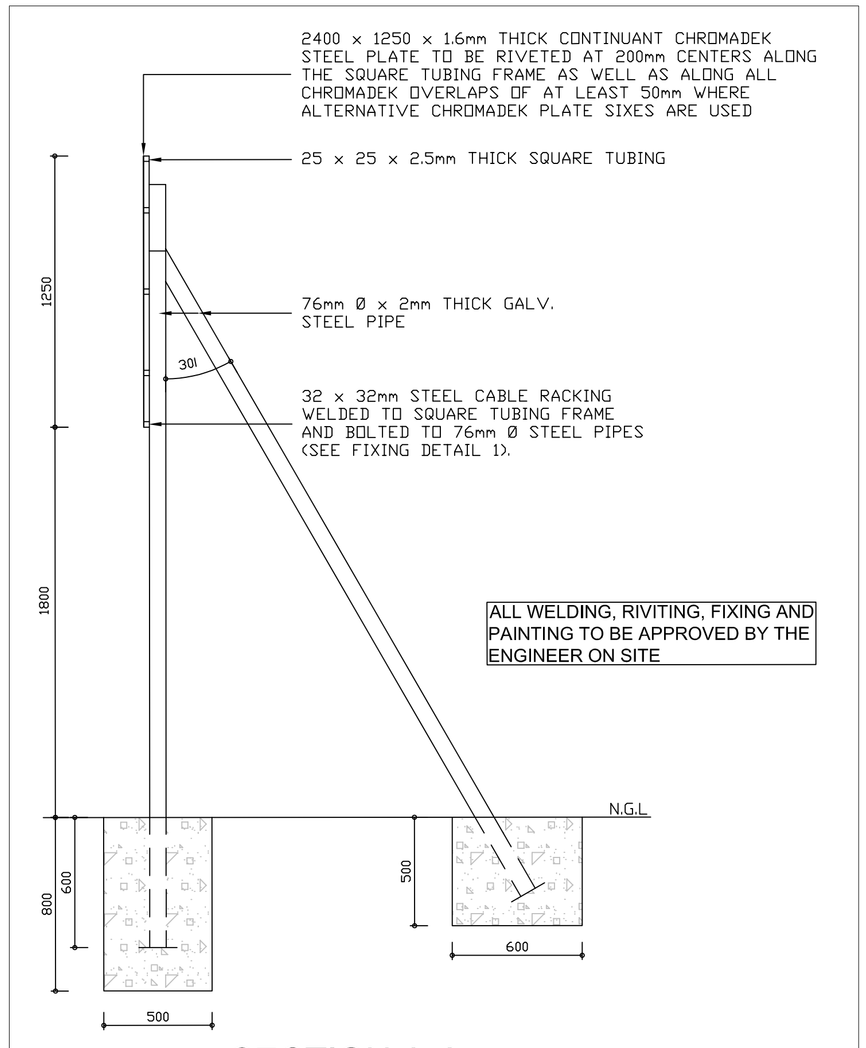

SECTION A-A

SCALE 1 : 20

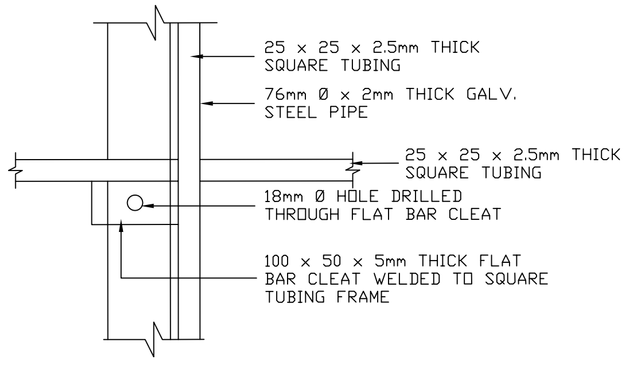

FIXING DETAIL 2

ALTERNATIVE FIXING DETAILS

SCALE 1 : 5

FOR TENDER

All dimensions must be verified on site before the works commence. Refer any discrepancies to the Engineer.

REVISION SCHEDULE

No	DATE	DESCRIPTION	DRW	CHK
A	19/10/22	ISSUED FOR TENDER	N.S.	A.K.

CONSULTING ENGINEER

SIGNATURE | PR No | DATE

CLIENT

SIGNATURE | DATE

DESIGNED	DRAWN	CHECKED
S.LETLALO	N. SHABANGU	A.KHUMALO

CONSULTANT

iX engineers
Infrastructure Excellence
Montrio Corporate Park | Block 3, 1st Floor North Wing | 10 Oliver Road Monument Heights | Kimberley | 8301
Tel: +27 (0) 53 830 0460 | Fax: +27 (0) 53 832 2497
www.ixengineers.co.za

CLIENT

Ubuntu Municipality

PROJECT

VICTORIA WEST UPGRADING OF GROUNDWATER SUPPLY

DRAWING DESCRIPTION

MIG NAME BOARD

SCALE FOR REDUCED PLAN

0 5 10 20 30 40 50

50mm ON ORIGINAL PLAN

DATE	SCALE	ORIGINAL SIZE
2022/10/19	AS SHOWN	A1

DRAWING NUMBER: 301824-CI-DRD-014

REV: A

P:\Proj - Active\301824 - Ubuntu Infrastructure projects\8. Drawings\3. New Drawings\301824 - Reservoir Fence.dwg

19/10/2022 5:12:49 Printed By: Ngosi Shabangu (Kimberley)

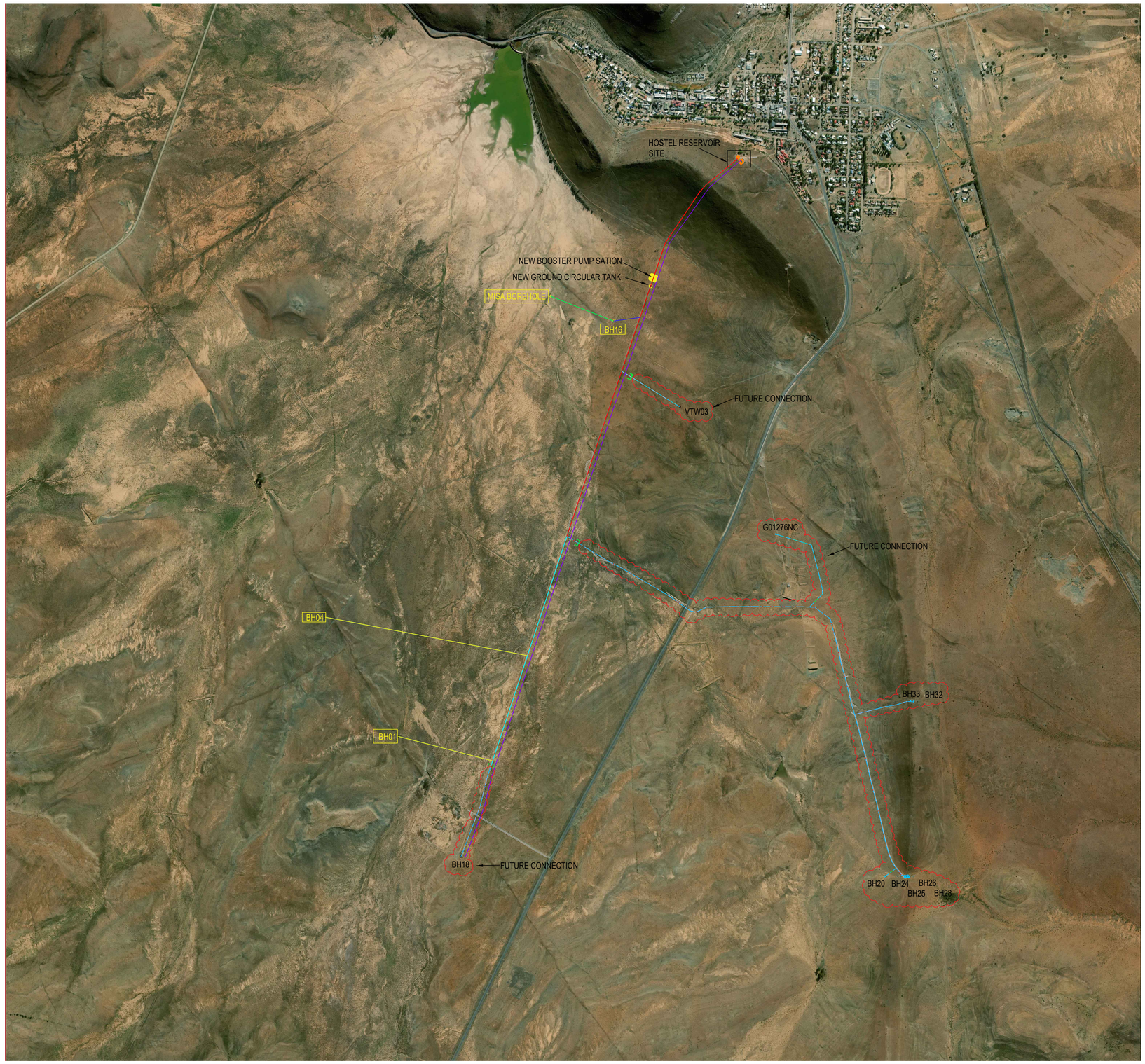

LEGEND:

- BH — PLANNED BOREHOLE TO BE EQUIPPED
- FUTURE BULK WATER SUPPLY PIPELINE
- EXISTING PIPELINE
- ND 50 mm NEW PIPELINE
- ND 75 mm NEW PIPELINE
- ND 90 mm NEW PIPELINE
- ND 110 mm NEW BULK PIPELINE
- ND 200 mm NEW BULK PIPELINE
- END CAP

TENDER

All dimensions must be verified on site before the works commence. Refer any discrepancies to the Engineer.

REVISION SCHEDULE

No	DATE	DESCRIPTION	DRW	CHK
A	13/10/22	FOR TENDER	NS	AK

CONSULTING ENGINEER

SIGNATURE | PR No | DATE

CLIENT

SIGNATURE | DATE

DESIGNED	DRAWN	CHECKED
S LETLALO	N SHABANGU	A KHUMALO

CONSULTANT

iX engineers
Infrastructure Excellence
Montrio Corporate Park | Block 3, 1st Floor North Wing | 10 Oliver Road Monument Heights | Kimberley | 8301
Tel: +27 (0) 53 830 0460 | Fax: +27 (0) 53 832 2497
www.ixengineers.co.za

CLIENT

Ubuntu Municipality

PROJECT

VICTORIA WEST UPGRADING OF GROUNDWATER SUPPLY

DRAWING DESCRIPTION

BULK WATER SUPPLY LAYOUT

SCALE FOR REDUCED PLAN

0 5 10 20 30 40 50
50mm ON ORIGINAL PLAN

DATE	SCALE	ORIGINAL SIZE
2022/10/12	NTS	A1

DRAWING NUMBER	REV
301824-CI-DRD-004	A

P:\Proj - Active\301824 - Ubuntu Infrastructure projects\8. Drawings\3. New Drawings\Borehole Wellfield 24.06.2020.dwg
19/10/2022 4:39:47 Printed By: Ngosi Shabangu (Kimberley)

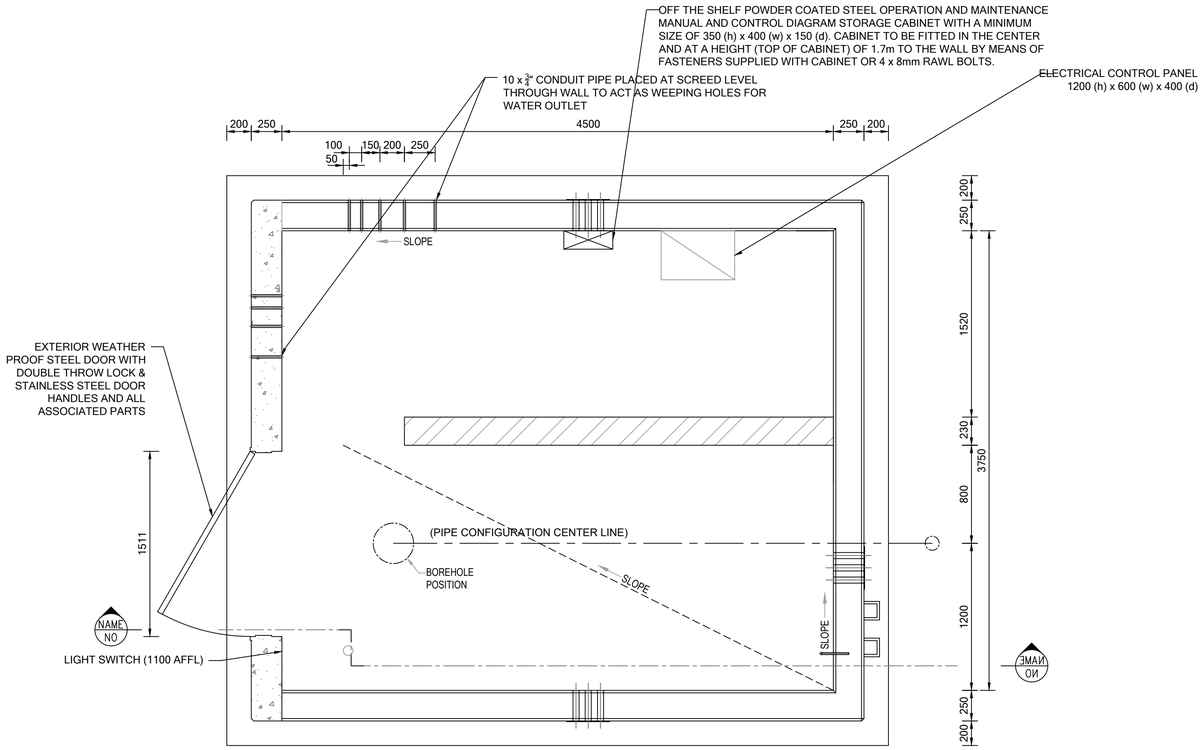

PLAN VIEW (SECTION B - B)
METER/VALVE CHAMBER
SCALE 1:25

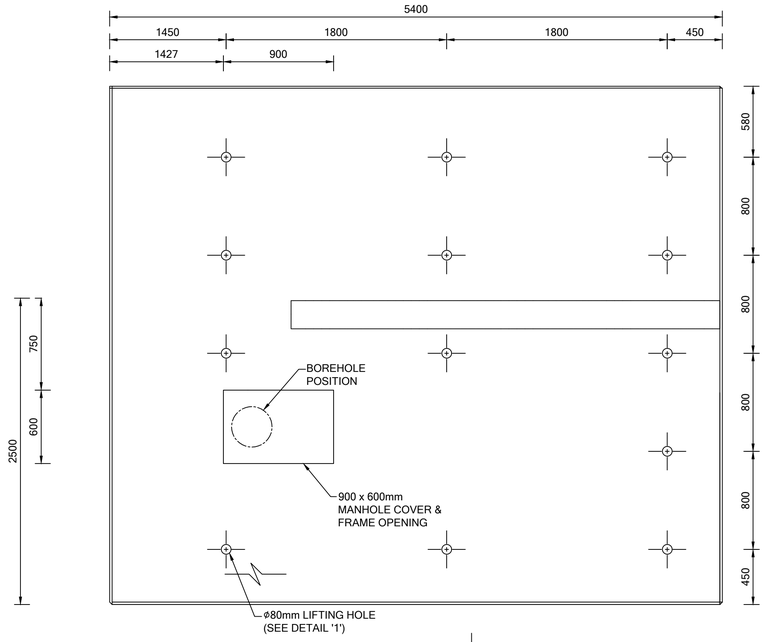

PLAN VIEW
CHAMBER - COVER SLAB
SCALE 1:25

NOTES

1. ALL DIMENSIONS ARE IN MILLIMETRES UNLESS OTHERWISE SHOWN.
2. PIPE MATERIAL: MAIN LINES AS PER LONGITUDINAL SECTIONS.
3. UNLESS OTHERWISE STATED, THE FOLLOWING SHALL APPLY TO ALL STEEL PIPES AND SPECIALS:

PIPE ND (mm)	PIPE WALL THICKNESS (mm)	SPECIFICATION
50	3.910	ASTM A106 GRADE B
80	5.490	ASTM A106 GRADE B
100	6.020	ASTM A106 GRADE B
150	7.110	ASTM A106 GRADE B
200	5.000	API 5L GRADE X42
250	5.000	API 5L GRADE X42
350	6.000	API 5L GRADE X42
400	6.000	API 5L GRADE X42

4. CORROSION PROTECTION:

   STEEL PIPES, SPECIALS AND FLANGES PASSING THROUGH CHAMBER WALLS AND OUTSIDE CHAMBERS (SOIL), TO BE TAPE WRAPPED.
5. CONCRETE:

   STRENGTH REQUIREMENT AT 28 DAYS:

   STRUCTURAL CONCRETE GRADE 30/19 MPa

   BLINDING AND MASS CONCRETE FILLING GRADE 15/19 MPa

   FINISHES:

   ROUGH: CONCEALED SURFACES BELOW FINISHED GROUND LEVEL, EXCEPT INSIDE CHAMBERS. REFER TO THE SPECIFICATIONS.

   SMOOTH: ALL SURFACE FINISHES NOT CLASSIFIED AS "ROUGH" ABOVE SHALL BE CLASSIFIED AS "SMOOTH". REFER TO THE SPECIFICATIONS.

   ALL EXPOSED EDGES TO HAVE 20 x 20mm CHAMFERS.
6. ALL STEEL BOLTS AND NUTS AND ANCHOR BOLTS INTO CONCRETE SHALL BE STAINLESS STEEL GRADE 304.

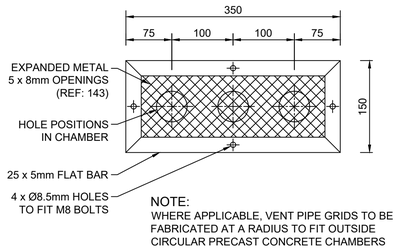

NOTE:
WHERE APPLICABLE, VENT PIPE GRIDS TO BE FABRICATED AT A RADIUS TO FIT OUTSIDE CIRCULAR PRECAST CONCRETE CHAMBERS

DETAIL 1: VENTILATION GRID
SCALE 1:5

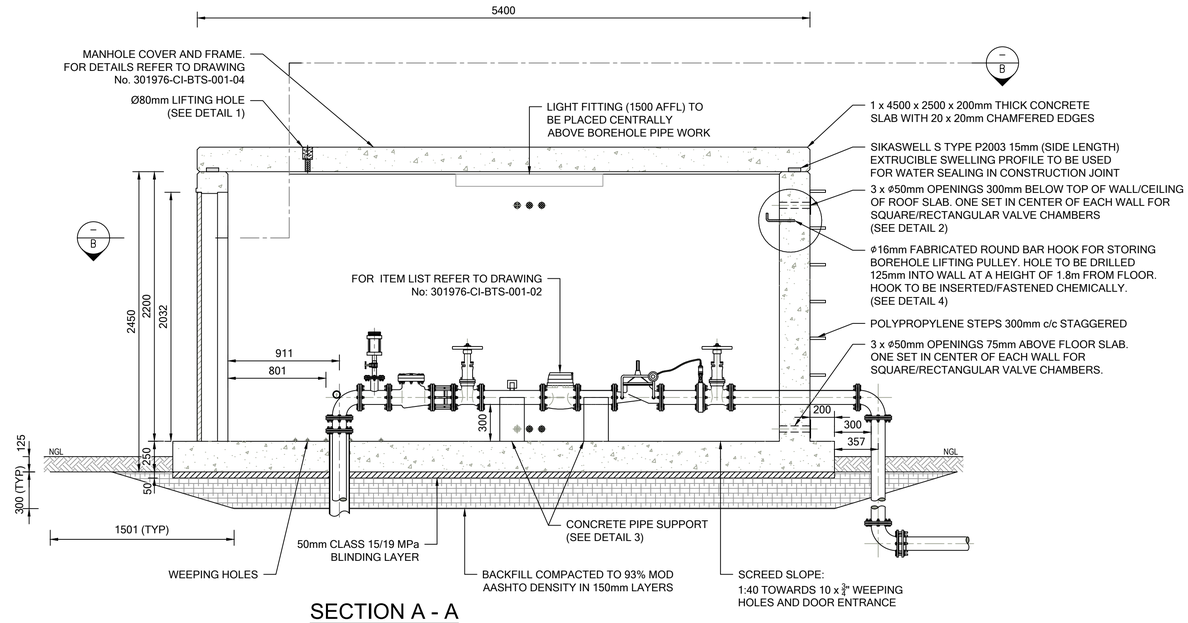

SECTION A - A
SCALE 1:25

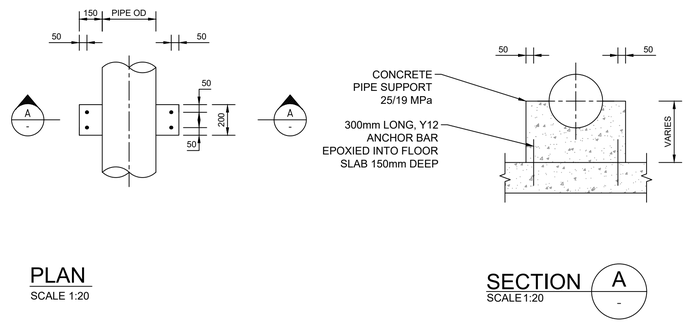

PLAN
SCALE 1:20

SECTION A
SCALE 1:20

DETAIL 2: TYPICAL CONCRETE PIPE SUPPORT
SCALE 1:20

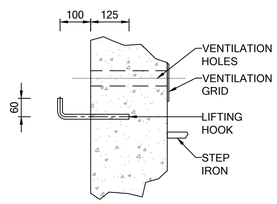

DETAIL 4 LIFTING HOOK DETAIL
SCALE 1:10

PRELIMINARY

All dimensions must be verified on site before the works commence. Refer any discrepancies to the Engineer.

REVISION SCHEDULE

No	DATE	DESCRIPTION	DRW	CHK
A	12/06/20	PRELIMINARY DESIGN	WvS	LL
B	13/10/22	FOR TENDER	WvS	LL

CONSULTING ENGINEER

SIGNATURE PR No DATE

CLIENT

SIGNATURE DATE

DESIGNED	DRAWN	CHECKED
L LOUW	W v STADEN	E SERFONTEIN

CONSULTANT
iX engineers
Infrastructure Excellence
Eastwood Office Park |Protea House | 270 Lynwood Service Road Lynnwood Ridge | Pretoria | 0081
Tel: +27 (0) 12 745 2000 | Fax: +27 (0) 12 745 2001
www.ixengineers.co.za

CLIENT
Ubuntu Municipality
mennwardighed • boop • inkosi
ubuntu • themba • izithethe
humanity • hope • heritage

PROJECT
VICTORIA WEST UPGRADING OF GROUNDWATER SUPPLY

DRAWING DESCRIPTION
DETAILS OF BOREHOLE PIPEWORK AND CHAMBER SHEET 1 OF 4

SCALE FOR REDUCED PLAN
0 5 10 20 30 40 50
50mm ON ORIGINAL PLAN

DATE	SCALE	ORIGINAL SIZE
2022/10/13	AS SHOWN	A1

DRAWING NUMBER: 301824-CI-DRD-001-01
REV: A

P:\Proj - Active\301824 - Ubuntu Infrastructure projects\8. Drawings\3. New Drawings\301824-CI-DRD-001-01 04 - Standard\301824-CI-DRD-001-01 04.dwg
17/10/2022 4:45:45 Printed By: Ngosi Shabangu (Kimberley)

NOTES

1. ALL DIMENSIONS ARE IN MILLIMETRES UNLESS OTHERWISE SHOWN.
2. PIPE MATERIAL: MAIN LINES AS PER LONGITUDINAL SECTIONS.
3. UNLESS OTHERWISE STATED, THE FOLLOWING SHALL APPLY TO ALL STEEL PIPES AND SPECIALS:

PIPE ND (mm)	PIPE WALL THICKNESS (mm)	SPECIFICATION
50	3.910	ASTM A106 GRADE B
80	5.490	ASTM A106 GRADE B
100	6.020	ASTM A106 GRADE B
150	7.110	ASTM A106 GRADE B
200	5.000	API 5L GRADE X42
250	5.000	API 5L GRADE X42
350	6.000	API 5L GRADE X42
400	6.000	API 5L GRADE X42

4. CORROSION PROTECTION:

   STEEL PIPES, SPECIALS AND FLANGES PASSING THROUGH CHAMBER WALLS AND OUTSIDE CHAMBERS (SOIL), TO BE TAPE WRAPPED.
5. CONCRETE:

   STRENGTH REQUIREMENT AT 28 DAYS:

   STRUCTURAL CONCRETE GRADE 30/19 MPa

   BLINDING AND MASS CONCRETE FILLING GRADE 15/19 MPa

   FINISHES:

   ROUGH: CONCEALED SURFACES BELOW FINISHED GROUND LEVEL, EXCEPT INSIDE CHAMBERS. REFER TO THE SPECIFICATIONS.

   SMOOTH: ALL SURFACE FINISHES NOT CLASSIFIED AS "ROUGH" ABOVE SHALL BE CLASSIFIED AS "SMOOTH". REFER TO THE SPECIFICATIONS.

   ALL EXPOSED EDGES TO HAVE 20 x 20mm CHAMFERS.
6. ALL STEEL BOLTS AND NUTS AND ANCHOR BOLTS INTO CONCRETE SHALL BE STAINLESS STEEL GRADE 304.

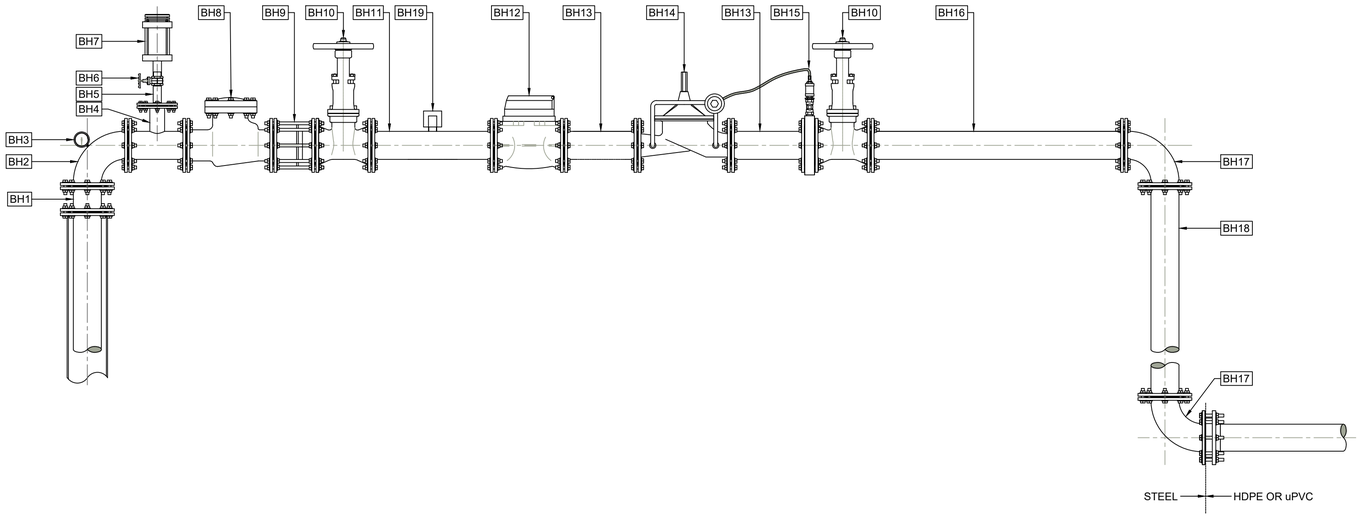

ITEM LIST

SCALE 1:12.5

BOREHOLE INSTALLATION PER CHAMBER

ITEM No.	DESCRIPTION	QTY	FLANGES	PRESSURE RATING (BAR)
BH1	100mm ND x 106mm LONG HDGMS PIPE BOTH ENDS FLANGED.	1	TABLE 1600	
BH2	100mm ND x 90º HDGMS BEND BOTH ENDS FLANGED. BEND TO BE DRILLED AND FITTED WITH SOCKET TO ACCOMMODATE 15mm ND PRESSURE GAUGE.	1	TABLE 1600	
BH3	2500kPa PRESSURE GAUGE.	1		25
BH4	100mm x 50mm ND HDGMS SPECIAL REDUCING T-PIECE. 50mm ND x 110mm LONG BRANCH. ALL ENDS FLANGED ACCORDING TO PIPE SIZE AND PRESSURE CLASS. 50mm ND FLANGE TO BE DRILLED AND TAPPED TO ACCOMMODATE 25mm ND PIPE.	1	TABLE 1600	
BH5	25mm ND x 100mm LONG HDGMS PIPE BOTH ENDS THREADED.	1		16
BH6	25mm ND GATE VALVE SCREWED.	1		16
BH7	25mm ND DOUBLE ORIFICE AIR VALVE WITH ANTI-SHOCK ORIFICE MECHANISM.	1		16
BH8	100mm ND FLANGED SWING CHECK VALVE.	1	TABLE 1600	16
BH9	100mm ND DISMANTLING JOINT.	1	TABLE 1600	16
BH10	100mm ND FLANGED RESILIENT SEATED GATE VALVE.	2	TABLE 1600	16
BH11	100mm ND x 500mm LONG HDGMS PIPE BOTH ENDS FLANGED. PIPE TO BE DRILLED AND FITTED WITH SOCKET TO ACCOMMODATE 25mm (1") FLOW SWITCH.	1	TABLE 1600	16
BH12	100mm ND FLANGED ELECTROMAGNETIC WATER METER WITH READING UNIT AND SCREEN MOUNTED ON METER. THE METER MUST BE CAPABLE OF MEASURING FLOWS OF BETWEEN 0.5 m^3/h and 15 m^3/h.	1	TABLE 1600	16
BH13	100mm ND x 300mm LONG HDGMS PIPE BOTH ENDS FLANGED.	2	TABLE 1600	16
BH14	100mm ND CLA-VAL 40-01 FLOW CONTROL VALVE	1	TABLE 1600	16
BH15	100mm ORIFICE PLATE ASSEMBLY	1	TABLE 1600	16
BH16	100mm ND x ±1035mm LONG HDGMS PIPE BOTH ENDS FLANGED. LENGTH OF PIPE DEPENDANT ON ORIFICE PLATE THICKNESS	1	TABLE 1600	
BH17	100mm ND HDGMS BEND BOTH ENDS FLANGED.	2	TABLE 1600	
BH18	100mm ND x 1204mm LONG HDGMS PIPE BOTH ENDS FLANGED.	1	TABLE 1600	16
BH19	FLOW SWITCH (THREADED) TO FIT IN 25mm (1") CONNECTION.	1		16

PLEASE NOTE THAT 'HDGMS' STANDS FOR HOT DIPPED GALVANIZED MILD STEEL

PRELIMINARY

REVISION SCHEDULE

No	DATE	DESCRIPTION	DRW	CHK
A	12/06/20	PRELIMINARY DESIGN	WvS	LL
B	13/10/22	FOR TENDER	WvS	LL

CONSULTING ENGINEER

SIGNATURE | PR No | DATE

CLIENT

SIGNATURE | DATE

DESIGNED	DRAWN	CHECKED
L LOUW	W v STADEN	E SERFONTEIN

CONSULTANT

iX engineers
Infrastructure Excellence
Eastwood Office Park |Protea House | 270 Lynwood Service Road Lynnwood Ridge | Pretoria | 0081
Tel: +27 (0) 12 745 2000 | Fax: +27 (0) 12 745 2001
www.ixengineers.co.za

CLIENT

Ubuntu Municipality

mensewardigheid • hoop • erfenis
ubuntu • themba • ubhethe
humanity • hope • heritage

PROJECT

VICTORIA WEST UPGRADING OF GROUNDWATER SUPPLY

DRAWING DESCRIPTION

DETAILS OF BOREHOLE PIPEWORK AND CHAMBER SHEET 2 OF 4

SCALE FOR REDUCED PLAN

0 5 10 20 30 40 50

50mm ON ORIGINAL PLAN

DATE	SCALE	ORIGINAL SIZE
2022/10/13	AS SHOWN	A1

DRAWING NUMBER	REV
301824-CI-DRD-001-02	A

P:\Proj - Active\301824 - Ubuntu Infrastructure projects\8. Drawings\3. New Drawings\301824-CI-DRD-001-01 04 - Standard\301824-CI-DRD-001-01 04.dwg

14/10/2022 12:36:59 Printed By: Ngosi Shabangu (Kimberley)

NOTES

1. ALL DIMENSIONS ARE IN MILLIMETRES UNLESS OTHERWISE SHOWN.

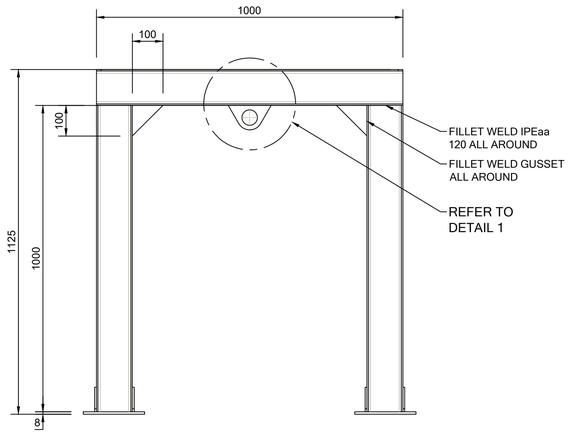

GANTRY FRONT VIEW
SCALE 1:10

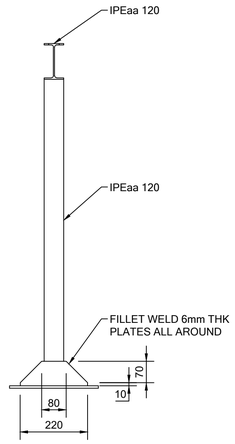

GANTRY LEFT VIEW
SCALE 1:10

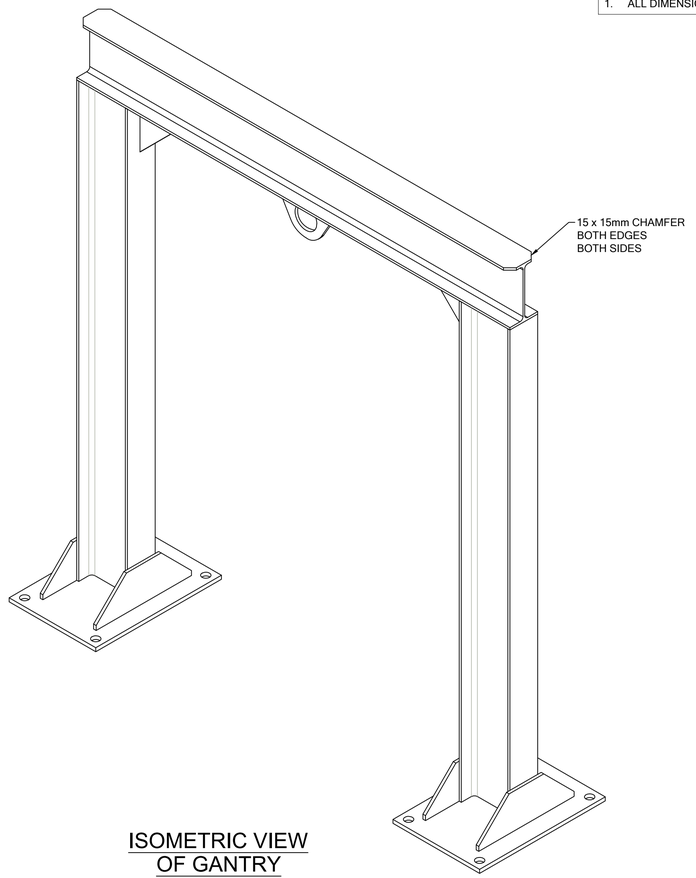

ISOMETRIC VIEW OF GANTRY
SCALE 1:5

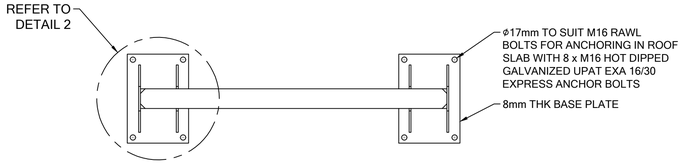

GANTRY TOP VIEW
SCALE 1:10

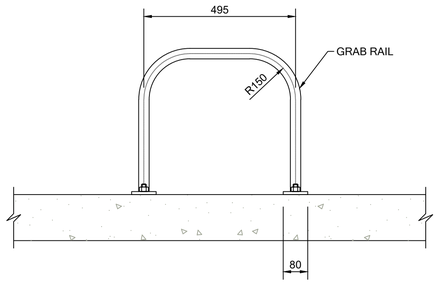

GRAB RAIL DETAIL FRONT SECTION
SCALE 1:15

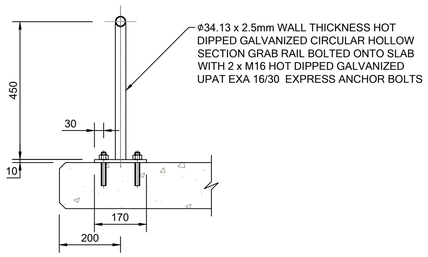

GRAB RAIL DETAIL SIDE SECTION
SCALE 1:15

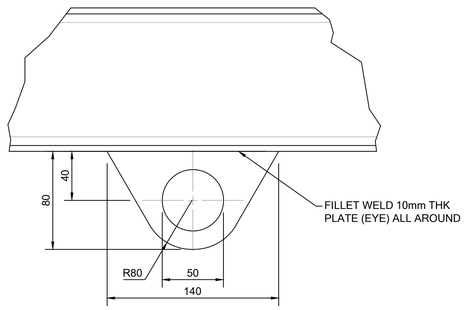

DETAIL 1
SCALE 1:5

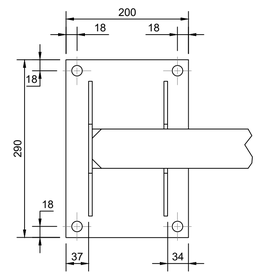

DETAIL 2
SCALE 1:5

PRELIMINARY

All dimensions must be verified on site before the works commence. Refer any discrepancies to the Engineer.

REVISION SCHEDULE

No	DATE	DESCRIPTION	DRW	CHK
A	12/06/20	PRELIMINARY DESIGN	WvS	LL
B	13/10/22	FOR TENDER	WvS	LL

CONSULTING ENGINEER

SIGNATURE	PR No	DATE

CLIENT

SIGNATURE		DATE

DESIGNED	DRAWN	CHECKED
L LOUW	W v STADEN	E SERFONTEIN

CONSULTANT

iX engineers
Infrastructure Excellence
Eastwood Office Park |Protea House | 270 Lynwood Service Road Lynnwood Ridge | Pretoria | 0081
Tel: +27 (0) 12 745 2000 | Fax: +27 (0) 12 745 2001
www.ixengineers.co.za

CLIENT
Ubuntu Municipality

PROJECT
VICTORIA WEST UPGRADING OF GROUNDWATER SUPPLY

DRAWING DESCRIPTION
DETAILS OF BOREHOLE PIPEWORK AND CHAMBER SHEET 3 OF 4

SCALE FOR REDUCED PLAN
0 5 10 20 30 40 50
50mm ON ORIGINAL PLAN

DATE	SCALE	ORIGINAL SIZE
2022/10/13	AS SHOWN	A1

DRAWING NUMBER	REV
301824-CI-DRD-001-03	A

P:\Proj - Active\301824 - Ubuntu Infrastructure projects\8. Drawings\3. New Drawings\301824-CI-DRD-001-01_04 - Standard\301824-CI-DRD-001-01_04.dwg

14/10/2022 12:39:25 Printed By: Ngosi Shabangu (Kimberley)

NOTES

1. ALL DIMENSIONS ARE IN MILLIMETRES UNLESS OTHERWISE SHOWN.

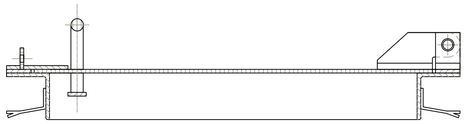

SECTION A-A
SCALE 1:5

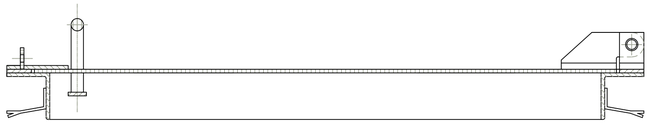

SECTION B-B
SCALE 1:5

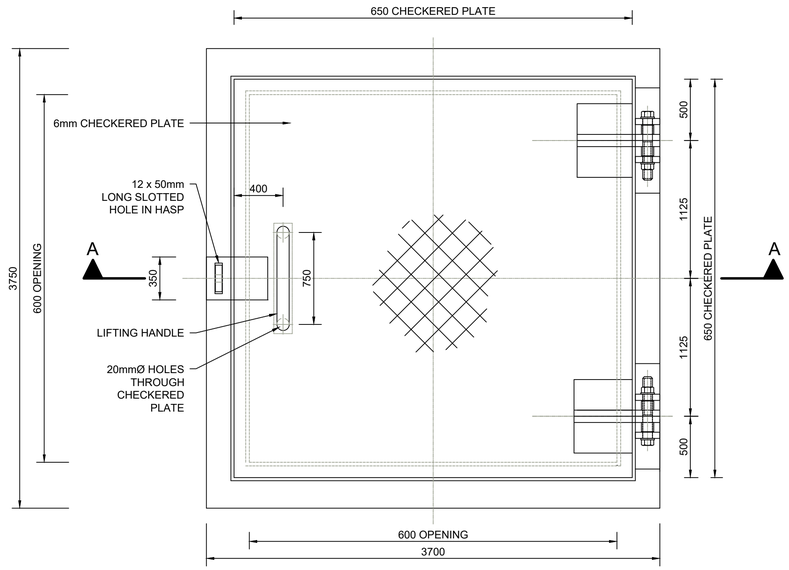

DETAIL OF CHAMBER
HINGED LID (600 x 600)
SCALE 1:5

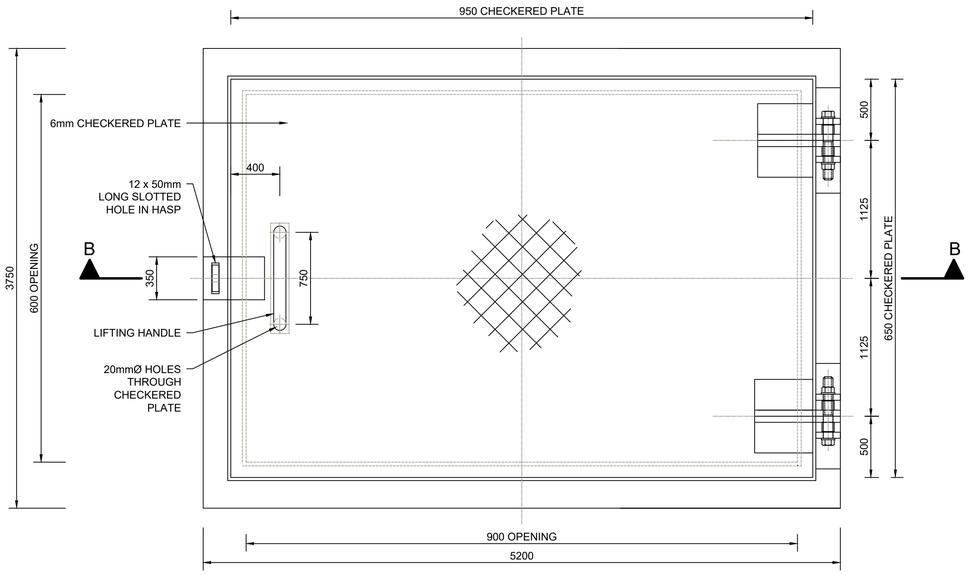

DETAIL OF CHAMBER
HINGED LID (900 x 600)
SCALE 1:5

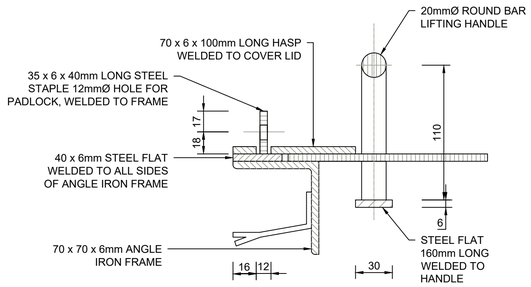

PART SECTION A-A & B-B
ENLARGED (AT HASP & STAPLE)
SCALE 1:2.5

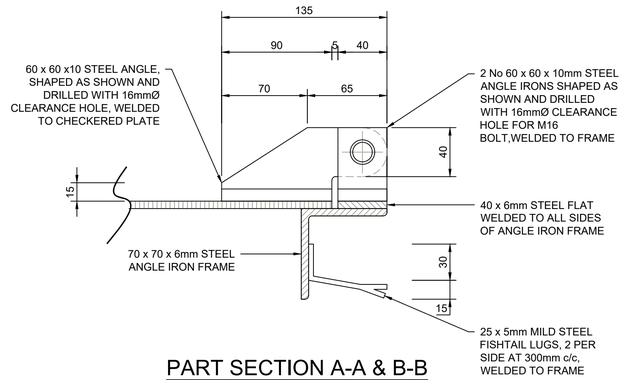

PART SECTION A-A & B-B
ENLARGED (AT HINGE)
SCALE 1:2.5

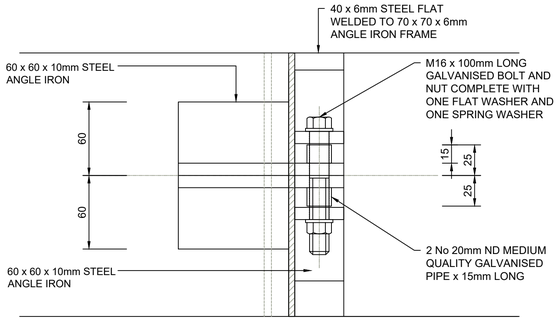

DETAIL PLAN OF HINGE
SCALE 1:2.5

PRELIMINARY

All dimensions must be verified on site before the works commence. Refer any discrepancies to the Engineer.

REVISION SCHEDULE

No	DATE	DESCRIPTION	DRW	CHK
A	12/06/20	PRELIMINARY DESIGN	WvS	LL
B	13/10/22	FOR TENDER	WvS	LL

CONSULTING ENGINEER

SIGNATURE	PR No	DATE

CLIENT

SIGNATURE		DATE

DESIGNED	DRAWN	CHECKED
L LOUW	W v STADEN	E SERFONTEIN

CONSULTANT
iX engineers
Infrastructure Excellence
Eastwood Office Park |Protea House | 270 Lynwood Service Road Lynwood Ridge | Pretoria | 0081
Tel: +27 (0) 12 745 2000 | Fax: +27 (0) 12 745 2001
www.ixengineers.co.za

CLIENT
Ubuntu Municipality

PROJECT
VICTORIA WEST UPGRADING OF GROUNDWATER SUPPLY

DRAWING DESCRIPTION
DETAILS OF BOREHOLE PIPEWORK AND CHAMBER SHEET 4 OF 4

SCALE FOR REDUCED PLAN
0 5 10 20 30 40 50
50mm ON ORIGINAL PLAN

DATE	SCALE	ORIGINAL SIZE
2022/10/13	AS SHOWN	A1

DRAWING NUMBER	REV
301824-CI-DRD-001-04	A

P:\Proj - Active\301824 - Ubuntu Infrastructure projects\8. Drawings\3. New Drawings\301824-CI-DRD-001-01_04 - Standard\301824-CI-DRD-001-01_04.dwg
14/10/2022 12:43:08 Printed By: Ngosi Shabangu (Kimberley)

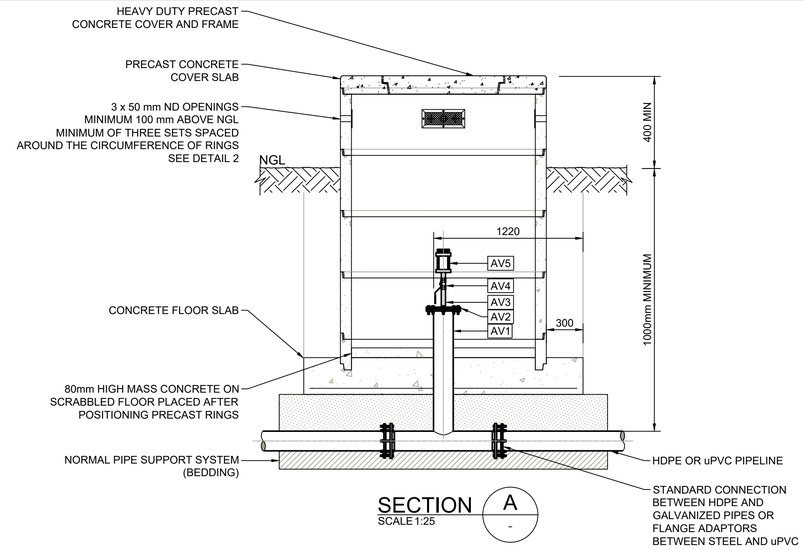

SECTION A
SCALE 1:25

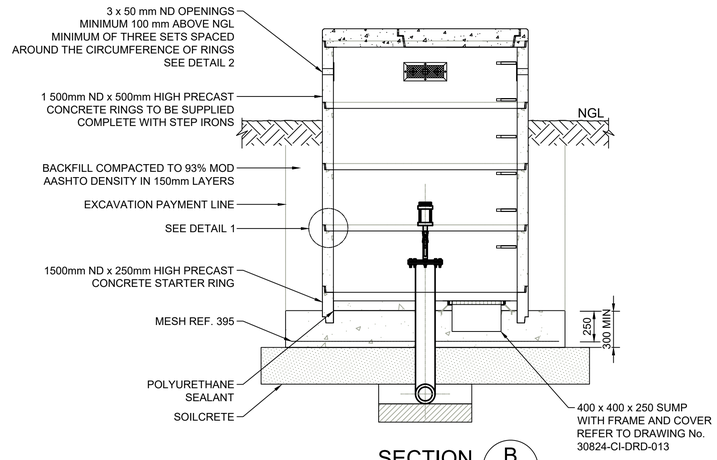

SECTION B
SCALE 1:25

NOTES

1. ALL DIMENSIONS ARE IN MILLIMETRES UNLESS OTHERWISE SHOWN.
2. PIPE MATERIAL: MAIN LINES AS PER LONGITUDINAL SECTIONS.
3. UNLESS OTHERWISE STATED, THE FOLLOWING SHALL APPLY TO ALL STEEL PIPES AND SPECIALS:

PIPE ND (mm)	PIPE WALL THICKNESS (mm)	SPECIFICATION
50	3.910	ASTM A106 GRADE B
80	5.490	ASTM A106 GRADE B
100	6.020	ASTM A106 GRADE B
150	7.110	ASTM A106 GRADE B
200	5.000	API 5L GRADE X42
250	5.000	API 5L GRADE X42
350	6.000	API 5L GRADE X42
400	6.000	API 5L GRADE X42

4. CORROSION PROTECTION:

   STEEL PIPES, SPECIALS AND FLANGES PASSING THROUGH CHAMBER WALLS AND OUTSIDE CHAMBERS (SOIL), TO BE TAPE WRAPPED.
5. CONCRETE:

   STRENGTH REQUIREMENT AT 28 DAYS:

   STRUCTURAL CONCRETE GRADE 30/19 MPa

   BLINDING AND MASS CONCRETE FILLING GRADE 15/19 MPa

   FINISHES:

   ROUGH: CONCEALED SURFACES BELOW FINISHED GROUND LEVEL, EXCEPT INSIDE CHAMBERS. REFER TO THE SPECIFICATIONS.

   SMOOTH: ALL SURFACE FINISHES NOT CLASSIFIED AS "ROUGH" ABOVE SHALL BE CLASSIFIED AS "SMOOTH". REFER TO THE SPECIFICATIONS.

   ALL EXPOSED EDGES TO HAVE 20 x 20mm CHAMFERS.
6. ALL STEEL BOLTS AND NUTS AND ANCHOR BOLTS INTO CONCRETE SHALL BE STAINLESS STEEL GRADE 304.

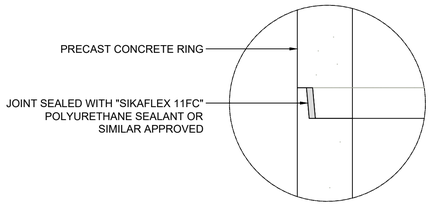

DETAIL 1: TYPICAL JOINT DETAIL
SCALE 1:5

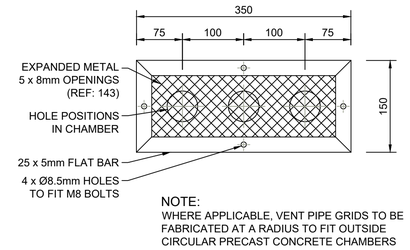

NOTE:
WHERE APPLICABLE, VENT PIPE GRIDS TO BE FABRICATED AT A RADIUS TO FIT OUTSIDE CIRCULAR PRECAST CONCRETE CHAMBERS

DETAIL 2: VENTILATION GRID
SCALE 1:5

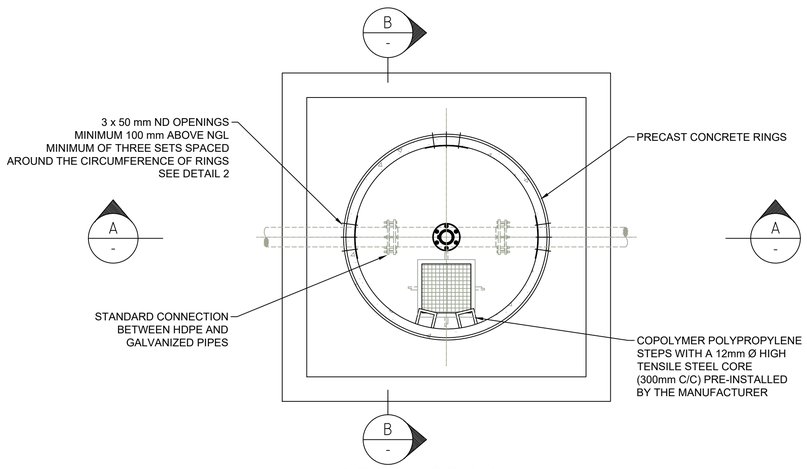

TYPICAL FLOOR PLAN
SCALE 1:25

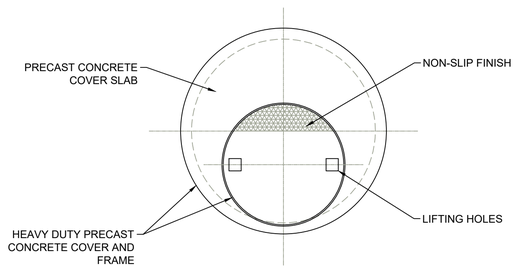

ROOF PLAN
SCALE 1:25

PRELIMINARY

All dimensions must be verified on site before the works commence. Refer any discrepancies to the Engineer.

P:\Proj - Active\301824 - Ubuntu Infrastructure projects\8. Drawings\3. New Drawings\301824-CI-DRD-002 - Standard\301824-CI-DRD-002.dwg

14/10/2022 12:50:44 Printed By: Ngosi Shabangu (Kimberley)

REVISION SCHEDULE

No	DATE	DESCRIPTION	DRW	CHK
A	12/06/20	PRELIMINARY DESIGN	WvS	LL
B	13/10/22	FOR TENDER	WvS	LL

CONSULTING ENGINEER

SIGNATURE | PR No | DATE

CLIENT

SIGNATURE | DATE

DESIGNED	DRAWN	CHECKED
L LOUW	W v STADEN	E SERFONTEIN

CONSULTANT

iX engineers
Infrastructure Excellence
Montrio Corporate Park | Block 3, 1st Floor North Wing | 10 Oliver Road Monument Heights | Kimberley | 8301
Tel: +27 (0) 53 830 0460 | Fax: +27 (0) 53 832 2497
www.ixengineers.co.za

CLIENT
Ubuntu Municipality

PROJECT
VICTORIA WEST UPGRADING OF GROUNDWATER SUPPLY

DRAWING DESCRIPTION
DETAILS OF AIR VALVE INSTALLATION AND CHAMBER
SHEET 1 OF 2

SCALE FOR REDUCED PLAN
0 5 10 20 30 40 50
50mm ON ORIGINAL PLAN

DATE	SCALE	ORIGINAL SIZE
2022/10/13	AS SHOWN	A1

DRAWING NUMBER	REV
3010824-CI-DRD-002-01	A

NOTES

1. ALL DIMENSIONS ARE IN MILLIMETRES UNLESS OTHERWISE SHOWN.
2. PIPE MATERIAL: MAIN LINES AS PER LONGITUDINAL SECTIONS.
3. UNLESS OTHERWISE STATED, THE FOLLOWING SHALL APPLY TO ALL STEEL PIPES AND SPECIALS:

PIPE ND (mm)	PIPE WALL THICKNESS (mm)	SPECIFICATION
50	3.910	ASTM A106 GRADE B
80	5.490	ASTM A106 GRADE B
100	6.020	ASTM A106 GRADE B
150	7.110	ASTM A106 GRADE B
200	5.000	API 5L GRADE X42
250	5.000	API 5L GRADE X42
350	6.000	API 5L GRADE X42
400	6.000	API 5L GRADE X42

4. CORROSION PROTECTION:

   STEEL PIPES, SPECIALS AND FLANGES PASSING THROUGH CHAMBER WALLS AND OUTSIDE CHAMBERS (SOIL), TO BE TAPE WRAPPED.
5. CONCRETE:

   STRENGTH REQUIREMENT AT 28 DAYS:

   STRUCTURAL CONCRETE GRADE 30/19 MPa

   BLINDING AND MASS CONCRETE FILLING GRADE 15/19 MPa

   FINISHES:

   ROUGH: CONCEALED SURFACES BELOW FINISHED GROUND LEVEL, EXCEPT INSIDE CHAMBERS. REFER TO THE SPECIFICATIONS.

   SMOOTH: ALL SURFACE FINISHES NOT CLASSIFIED AS "ROUGH" ABOVE SHALL BE CLASSIFIED AS "SMOOTH". REFER TO THE SPECIFICATIONS.

   ALL EXPOSED EDGES TO HAVE 20 x 20mm CHAMFERS.
6. ALL STEEL BOLTS AND NUTS AND ANCHOR BOLTS INTO CONCRETE SHALL BE STAINLESS STEEL GRADE 304.

AIR VALVE INSTALLATION FOR 50 mm ND PIPES PER CHAMBER

ITEM No.	DESCRIPTION	QTY	FLANGES (SANS 1123)	PRESSURE RATING (BAR)
AV1	50mm x 50mmm ND HDGMS SPECIAL T-PIECE. 50mm ND x 1130mm LONG BRANCH. ALL ENDS FLANGED	1	TABLE 1600	-
AV2	50mm ND HDGMS BLANK FLANGE WITH 25mm ND HOLE DRILLED IN CENTER AND TAPPED TO ACCOMMODATE 25mm ND STUB.	1	TABLE 1600	-
AV3	25mm ND x 200mm LONG HDGMS PIPE (STUB), THREADED BOTH ENDS.	1		16
AV4	25mm ND BALL VALVE.	1		16
AV5	25mm ND DOUBLE ORIFICE AIR VALVE. WITH ANTI SHOCK ORIFICE MECHANISM.	1		16
PLEASE NOTE THAT 'HDGMS' STANDS FOR HOT DIPPED GALVANIZED MILD STEEL				

AIR VALVE INSTALLATION FOR 75 mm ND PIPES PER CHAMBER

ITEM No.	DESCRIPTION	QTY	FLANGES (SANS 1123)	PRESSURE RATING (BAR)
AV1	80mm x 80mmm ND HDGMS SPECIAL T-PIECE. 80m ND x 1130 mm LONG BRANCH. ALL ENDS FLANGED	1	TABLE 1600	-
AV2	80mm ND HDGMS BLANK FLANGE WITH 25mm ND HOLE DRILLED IN CENTER AND TAPPED TO ACCOMMODATE 25mm ND STUB.	1	TABLE 1600	-
AV3	25mm ND x 200mm LONG HDGMS PIPE (STUB), THREADED BOTH ENDS.	1		16
AV4	25mm ND BALL VALVE.	1		16
AV5	25mm ND DOUBLE ORIFICE AIR VALVE. WITH ANTI SHOCK ORIFICE MECHANISM.	1		16
PLEASE NOTE THAT 'HDGMS' STANDS FOR HOT DIPPED GALVANIZED MILD STEEL				

AIR VALVE INSTALLATION FOR 90 mm ND PIPES PER CHAMBER

ITEM No.	DESCRIPTION	QTY	FLANGES (SANS 1123)	PRESSURE RATING (BAR)
AV1	100mm x 100mmm ND HDGMS SPECIAL T-PIECE. 100mm ND x 1130 mm LONG BRANCH. ALL ENDS FLANGED	1	TABLE 1600	-
AV2	100mm ND HDGMS BLANK FLANGE WITH 25mm ND HOLE DRILLED IN CENTER AND TAPPED TO ACCOMMODATE 25mm ND STUB.	1	TABLE 1600	-
AV3	25mm ND x 200mm LONG HDGMS PIPE (STUB), THREADED BOTH ENDS.	1		16
AV4	25mm ND BALL VALVE.	1		16
AV5	25mm ND DOUBLE ORIFICE AIR VALVE. WITH ANTI SHOCK ORIFICE MECHANISM.	1		16
PLEASE NOTE THAT 'HDGMS' STANDS FOR HOT DIPPED GALVANIZED MILD STEEL				

AIR VALVE INSTALLATION FOR 110 mm ND PIPES PER CHAMBER

ITEM No.	DESCRIPTION	QTY	FLANGES (SANS 1123)	PRESSURE RATING (BAR)
AV1	100mm x 100mmm ND HDGMS SPECIAL T-PIECE. 100mm ND x 1130 mm LONG BRANCH. ALL ENDS FLANGED	1	TABLE 1600	-
AV2	100mm ND HDGMS BLANK FLANGE WITH 25mm ND HOLE DRILLED IN CENTER AND TAPPED TO ACCOMMODATE 25mm ND STUB.	1	TABLE 1600	-
AV3	25mm ND x 200mm LONG HDGMS PIPE (STUB), THREADED BOTH ENDS.	1	-	16
AV4	25mm ND BALL VALVE.	1	-	16
AV5	25mm ND DOUBLE ORIFICE AIR VALVE. WITH ANTI SHOCK ORIFICE MECHANISM.	1	-	16
PLEASE NOTE THAT 'HDGMS' STANDS FOR HOT DIPPED GALVANIZED MILD STEEL				

AIR VALVE INSTALLATION FOR 160 mm ND PIPES PER CHAMBER

ITEM No.	DESCRIPTION	QTY	FLANGES (SANS 1123)	PRESSURE RATING (BAR)
AV1	150mm x 150mmm ND HDGMS SPECIAL T-PIECE. 150mm ND x 1130 mm LONG BRANCH. ALL ENDS FLANGED	1	TABLE 1600	-
AV2	150mm ND HDGMS BLANK FLANGE WITH 25mm ND HOLE DRILLED IN CENTER AND TAPPED TO ACCOMMODATE 25mm ND STUB.	1	TABLE 1600	-
AV3	25mm ND x 200mm LONG HDGMS PIPE (STUB), THREADED BOTH ENDS.	1	-	16
AV4	25mm ND BALL VALVE.	1	-	16
AV5	25mm ND DOUBLE ORIFICE AIR VALVE. WITH ANTI SHOCK ORIFICE MECHANISM.	1	-	16
PLEASE NOTE THAT 'HDGMS' STANDS FOR HOT DIPPED GALVANIZED MILD STEEL				

PRELIMINARY

All dimensions must be verified on site before the works commence. Refer any discrepancies to the Engineer.

REVISION SCHEDULE

No	DATE	DESCRIPTION	DRW	CHK
A	12/06/20	PRELIMINARY DESIGN	WvS	LL
B	13/10/22	FOR TENDER	WvS	LL

CONSULTING ENGINEER

SIGNATURE | PR No | DATE

CLIENT

SIGNATURE | DATE

DESIGNED	DRAWN	CHECKED
L LOUW	W v STADEN	E SERFONTEIN

CONSULTANT

iX engineers
Infrastructure Excellence

Montrio Corporate Park | Block 3, 1st Floor North Wing | 10 Oliver Road Monument Heights | Kimberley | 8301
Tel: +27 (0) 53 830 0460 | Fax: +27 (0) 53 832 2497
www.ixengineers.co.za

CLIENT

Ubuntu Municipality

PROJECT

VICTORIA WEST UPGRADING OF GROUNDWATER SUPPLY

DRAWING DESCRIPTION

DETAILS OF AIR VALVE INSTALLATION AND CHAMBER
SHEET 2 OF 2

SCALE FOR REDUCED PLAN

0 5 10 20 30 40 50
50mm ON ORIGINAL PLAN

DATE	SCALE	ORIGINAL SIZE
2022/10/13	AS SHOWN	A1

DRAWING NUMBER	REV
3010824-CI-DRD-002-02	A

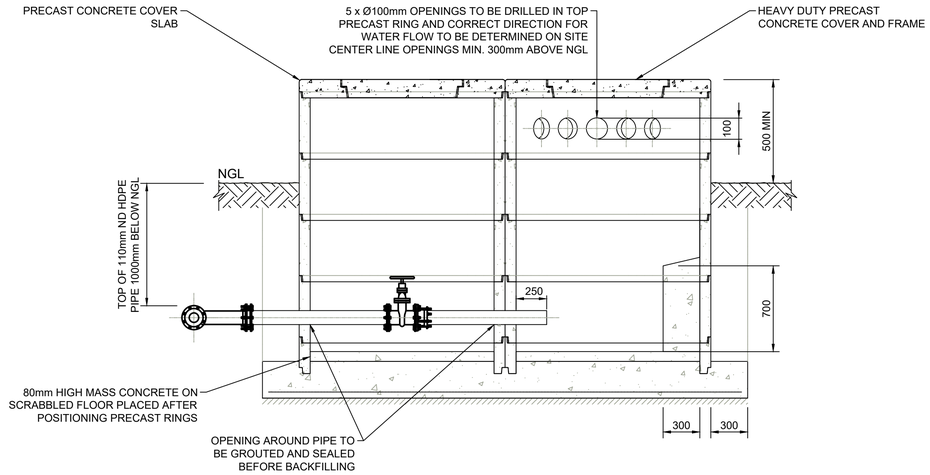

SECTION A
SCALE 1:25

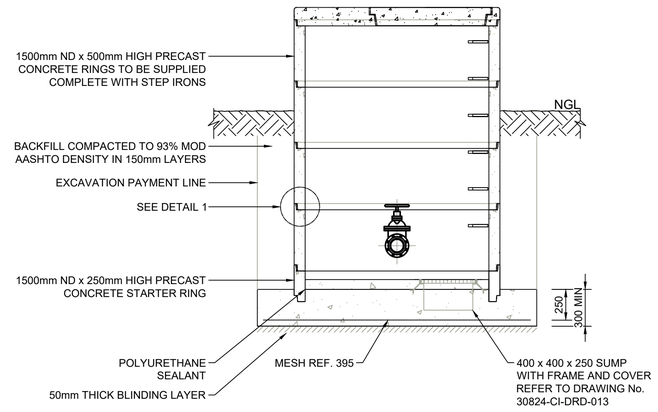

SECTION B
SCALE 1:25

NOTES

1. ALL DIMENSIONS ARE IN MILLIMETRES UNLESS OTHERWISE SHOWN.
2. PIPE MATERIAL: MAIN LINES AS PER LONGITUDINAL SECTIONS.
3. UNLESS OTHERWISE STATED, THE FOLLOWING SHALL APPLY TO ALL STEEL PIPES AND SPECIALS:

PIPE ND (mm)	PIPE WALL THICKNESS (mm)	SPECIFICATION
50	3.910	ASTM A106 GRADE B
80	5.490	ASTM A106 GRADE B
100	6.020	ASTM A106 GRADE B
150	7.110	ASTM A106 GRADE B
200	5.000	API 5L GRADE X42
250	5.000	API 5L GRADE X42
350	6.000	API 5L GRADE X42
400	6.000	API 5L GRADE X42

4. CORROSION PROTECTION:

   STEEL PIPES, SPECIALS AND FLANGES PASSING THROUGH CHAMBER WALLS AND OUTSIDE CHAMBERS (SOIL), TO BE TAPE WRAPPED.
5. CONCRETE:

   STRENGTH REQUIREMENT AT 28 DAYS:

   STRUCTURAL CONCRETE GRADE 30/19 MPa

   BLINDING AND MASS CONCRETE FILLING GRADE 15/19 MPa

   FINISHES:

   ROUGH: CONCEALED SURFACES BELOW FINISHED GROUND LEVEL, EXCEPT INSIDE CHAMBERS. REFER TO THE SPECIFICATIONS.

   SMOOTH: ALL SURFACE FINISHES NOT CLASSIFIED AS "ROUGH" ABOVE SHALL BE CLASSIFIED AS "SMOOTH". REFER TO THE SPECIFICATIONS.

   ALL EXPOSED EDGES TO HAVE 20 x 20mm CHAMFERS.
6. ALL STEEL BOLTS AND NUTS AND ANCHOR BOLTS INTO CONCRETE SHALL BE STAINLESS STEEL GRADE 304.

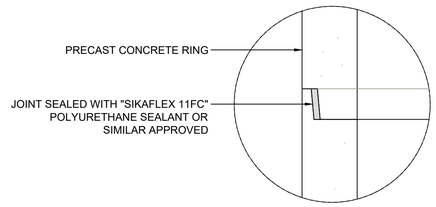

DETAIL 1: TYPICAL JOINT DETAIL
SCALE 1:5

SCOUR VALVE INSTALLATION FOR 110mm ND PIPES

ITEM No.	DESCRIPTION	QTY	FLANGES (SANS 1123)	PRESSURE RATING (BAR)
SC1	100mm x 100mm ND FLANGED SPECIAL T-PIECE WITH 100mm ND x 500mm LONG BRANCH.	1	TABLE 1600	-
SC2	100mm ND x 1160mm LONG HDGMS PIPE WITH BOTH ENDS FLANGED.	1	TABLE 1600	-
SC3	100mm ND FLANGED METAL SEATED WEDGE GATE VALVE.	1	TABLE 1600	16
SC4	100mm ND DISMANTLING JOINT.	1	TABLE 1600	16
SC5	100mm ND x ±1050mm LONG HDGMS PIPE WITH ONE END FLANGED. LENGTH TO SUIT DISMANTLING JOINT.	1	TABLE 1600	-
PLEASE NOTE THAT "HDGMS" STANDS FOR HOT DIPPED GALVANIZED MILD STEEL				

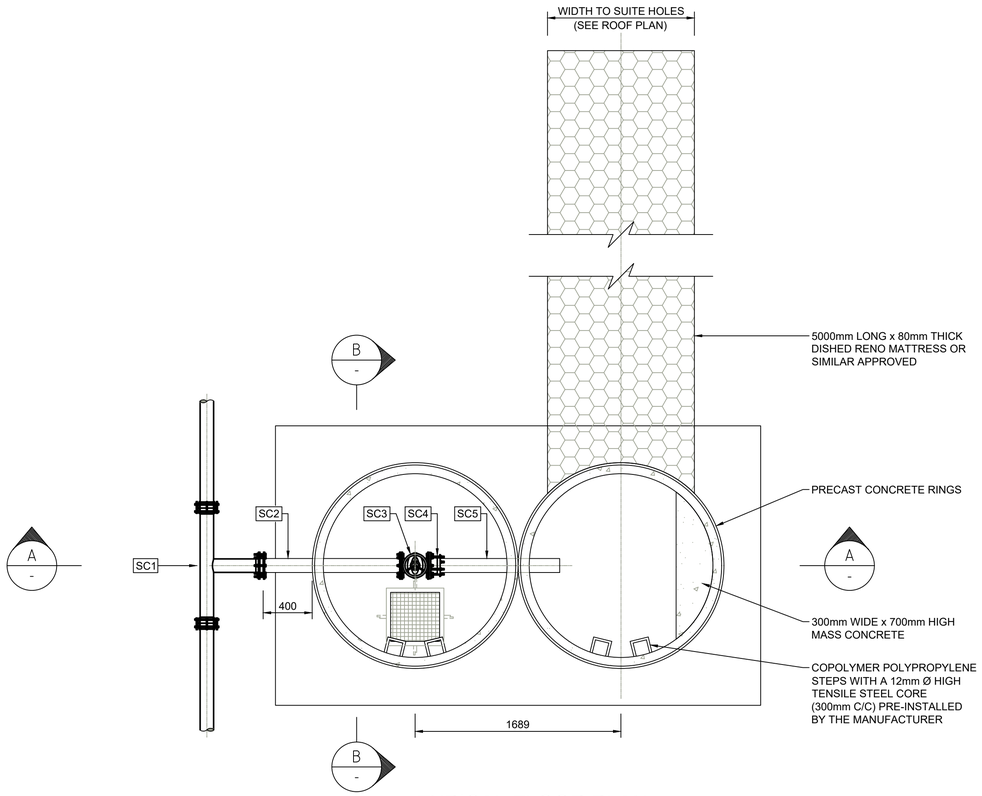

TYPICAL FLOOR PLAN
SCALE 1:25

SCOUR VALVE INSTALLATION FOR 160mm ND PIPES

ITEM No.	DESCRIPTION	QTY	FLANGES (SANS 1123)	PRESSURE RATING (BAR)
SC1	150mm x 100mm ND FLANGED SPECIAL T-PIECE WITH 100mm ND x 500mm LONG BRANCH.	1	TABLE 1600	-
SC2	100mm ND x 1160mm LONG HDGMS PIPE WITH BOTH ENDS FLANGED.	1	TABLE 1600	-
SC3	100mm ND FLANGED METAL SEATED WEDGE GATE VALVE.	1	TABLE 1600	16
SC4	100mm ND DISMANTLING JOINT.	1	TABLE 1600	16
SC5	100mm ND x ±1010mm LONG HDGMS PIPE WITH ONE END FLANGED. LENGTH TO SUIT DISMANTLING JOINT.	1	TABLE 1600	-
PLEASE NOTE THAT "HDGMS" STANDS FOR HOT DIPPED GALVANIZED MILD STEEL				

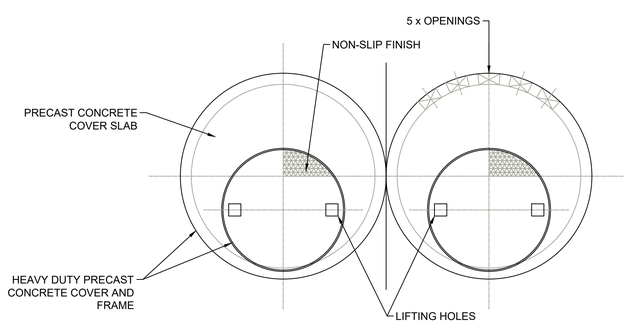

ROOF PLAN
SCALE 1:25

PRELIMINARY

All dimensions must be verified on site before the works commence. Refer any discrepancies to the Engineer.

REVISION SCHEDULE

No	DATE	DESCRIPTION	DRW	CHK
A	12/06/20	PRELIMINARY DESIGN	WvS	LL
B	13/10/22	FOR TENDER	WvS	LL

CONSULTING ENGINEER

SIGNATURE | PR No | DATE

CLIENT

SIGNATURE | DATE

DESIGNED	DRAWN	CHECKED
L LOUW	W v STADEN	E SERFONTEIN

CONSULTANT

iX engineers
Infrastructure Excellence
Montrio Corporate Park | Block 3, 1st Floor North Wing | 10 Oliver Road Monument Heights | Kimberley | 8301
Tel: +27 (0) 53 830 0460 | Fax: +27 (0) 53 832 2497
www.ixengineers.co.za

CLIENT
Ubuntu Municipality
mensswaardigheid • hoop • erfenis
ubuntu • dhemna • izithethe
humanity • hope • heritage

PROJECT
VICTORIA WEST UPGRADING OF GROUNDWATER SUPPLY

DRAWING DESCRIPTION
DETAILS OF SCOUR VALVE INSTALLATION AND CHAMBER

SCALE FOR REDUCED PLAN
0 5 10 20 30 40 50
50mm ON ORIGINAL PLAN

DATE	SCALE	ORIGINAL SIZE
2022/10/13	AS SHOWN	A1

DRAWING NUMBER: 301824-CI-DRD-003
REV: A

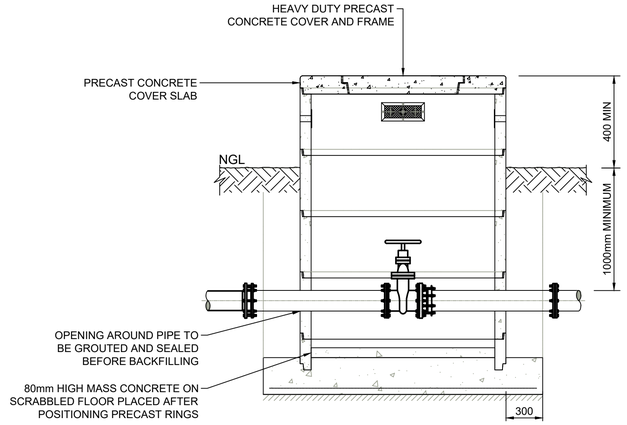

SECTION A
SCALE 1:25

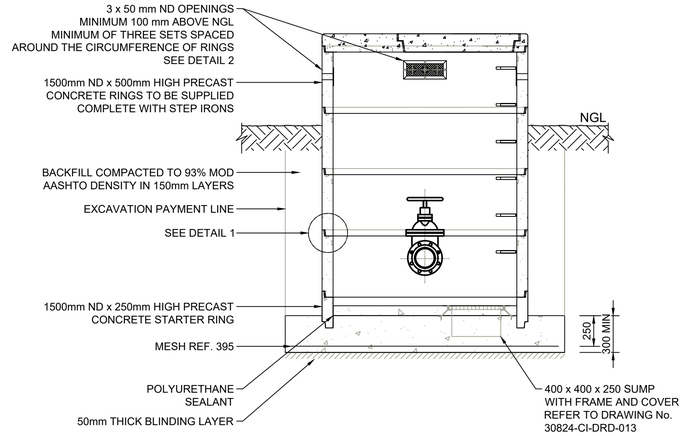

SECTION B
SCALE 1:25

NOTES

1. ALL DIMENSIONS ARE IN MILLIMETRES UNLESS OTHERWISE SHOWN.
2. PIPE MATERIAL: MAIN LINES AS PER LONGITUDINAL SECTIONS.
3. UNLESS OTHERWISE STATED, THE FOLLOWING SHALL APPLY TO ALL STEEL PIPES AND SPECIALS:

PIPE ND (mm)	PIPE WALL THICKNESS (mm)	SPECIFICATION
50	3.910	ASTM A106 GRADE B
80	5.490	ASTM A106 GRADE B
100	6.020	ASTM A106 GRADE B
150	7.110	ASTM A106 GRADE B
200	5.000	API 5L GRADE X42
250	5.000	API 5L GRADE X42
350	6.000	API 5L GRADE X42
400	6.000	API 5L GRADE X42

4. CORROSION PROTECTION:

   STEEL PIPES, SPECIALS AND FLANGES PASSING THROUGH CHAMBER WALLS AND OUTSIDE CHAMBERS (SOIL), TO BE TAPE WRAPPED.
5. CONCRETE:

   STRENGTH REQUIREMENT AT 28 DAYS:

   STRUCTURAL CONCRETE GRADE 30/19 MPa

   BLINDING AND MASS CONCRETE FILLING GRADE 15/19 MPa

   FINISHES:

   ROUGH: CONCEALED SURFACES BELOW FINISHED GROUND LEVEL, EXCEPT INSIDE CHAMBERS. REFER TO THE SPECIFICATIONS.

   SMOOTH: ALL SURFACE FINISHES NOT CLASSIFIED AS "ROUGH" ABOVE SHALL BE CLASSIFIED AS "SMOOTH". REFER TO THE SPECIFICATIONS.

   ALL EXPOSED EDGES TO HAVE 20 x 20mm CHAMFERS.
6. ALL STEEL BOLTS AND NUTS AND ANCHOR BOLTS INTO CONCRETE SHALL BE STAINLESS STEEL GRADE 304.

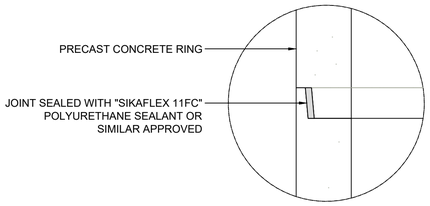

DETAIL 1: TYPICAL JOINT DETAIL
SCALE 1:5

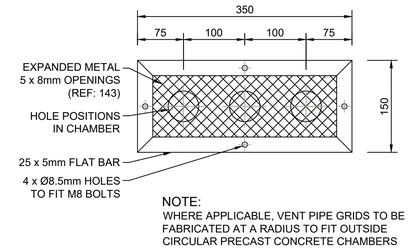

NOTE:
WHERE APPLICABLE, VENT PIPE GRIDS TO BE FABRICATED AT A RADIUS TO FIT OUTSIDE CIRCULAR PRECAST CONCRETE CHAMBERS

DETAIL 2: VENTILATION GRID
SCALE 1:5

ISOLATING VALVE INSTALLATION FOR 90mm ND PIPES PER CHAMBER

ITEM No.	DESCRIPTION	QTY	FLANGES	PRESSURE RATING (BAR)
IV1	100mm ND x 1150mm LONG HDGMS PIPE WITH BOTH ENDS FLANGED.	1	TABLE 1600	-
IV2	100mm ND FLANGED RESILIENT SEATED GATE VALVE.	1	TABLE 1600	16
IV3	100mm ND DISMANTLING JOINT.	1	TABLE 1600	16
IV4	100mm ND x ±1100mm LONG HDGMS PIPE WITH ONE END FLANGED. LENGTH TO SUIT DISMANTLING JOINT.	1	TABLE 1600	-
PLEASE NOTE THAT 'HDGMS' STANDS FOR HOT DIPPED GALVANIZED MILD STEEL				

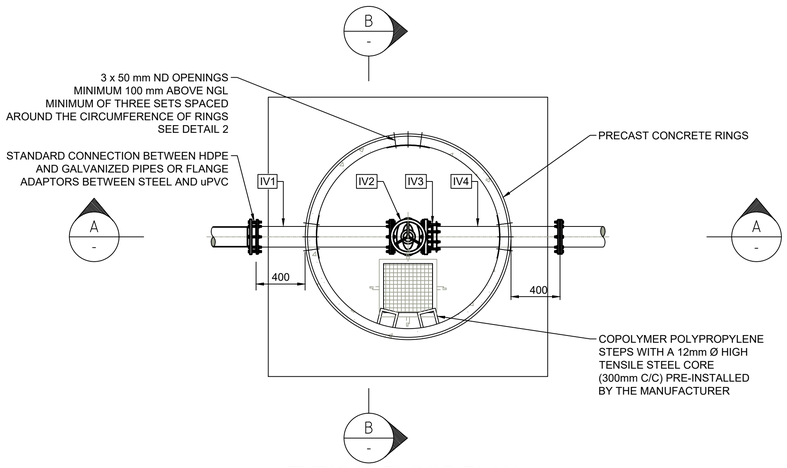

TYPICAL FLOOR PLAN
SCALE 1:25

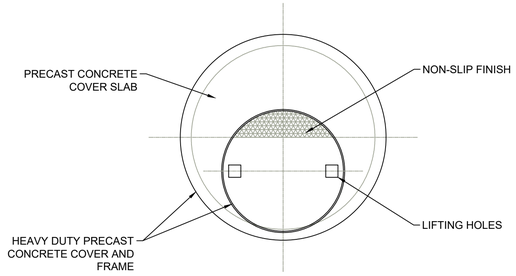

ROOF PLAN
SCALE 1:25

ISOLATING VALVE INSTALLATION FOR 140mm & 160mm ND PIPES PER CHAMBER

ITEM No.	DESCRIPTION	QTY	FLANGES	PRESSURE RATING (BAR)
IV1	150mm ND x 1085mm LONG HDGMS PIPE WITH BOTH ENDS FLANGED.	1	TABLE 1600	-
IV2	150mm ND FLANGED RESILIENT SEATED GATE VALVE.	1	TABLE 1600	16
IV3	150mm ND DISMANTLING JOINT.	1	TABLE 1600	16
IV4	150mm ND x ±1045mm LONG HDGMS PIPE WITH ONE END FLANGED. LENGTH TO SUIT DISMANTLING JOINT.	1	TABLE 1600	-
PLEASE NOTE THAT 'HDGMS' STANDS FOR HOT DIPPED GALVANIZED MILD STEEL				

PRELIMINARY

All dimensions must be verified on site before the works commence. Refer any discrepancies to the Engineer.

REVISION SCHEDULE

No	DATE	DESCRIPTION	DRW	CHK
A	12/06/20	PRELIMINARY DESIGN	WvS	LL
B	13/10/22	FOR TENDER	WvS	LL

CONSULTING ENGINEER

SIGNATURE	PR No	DATE

CLIENT

SIGNATURE		DATE
DESIGNED	DRAWN	CHECKED
L LOUW	W v STADEN	E SERFONTEIN

CONSULTANT
iX engineers
Infrastructure Excellence
Montrio Corporate Park | Block 3, 1st Floor North Wing | 10 Oliver Road Monument Heights | Kimberley | 8301
Tel: +27 (0) 53 830 0460 | Fax: +27 (0) 53 832 2497
www.ixengineers.co.za

CLIENT
Ubuntu Municipality
mensewandighandi • hoop • erfenis
ubuntu • dhemba • izithethe
humanity • hope • heritage

PROJECT
VICTORIA WEST UPGRADING OF GROUNDWATER SUPPLY

DRAWING DESCRIPTION
DETAILS OF ISOLATING VALVE INSTALLATION AND CHAMBER

SCALE FOR REDUCED PLAN
0 5 10 20 30 40 50
50mm ON ORIGINAL PLAN

DATE	SCALE	ORIGINAL SIZE
2022/10/13	AS SHOWN	A1

DRAWING NUMBER: 301824-CI-DRD-004
REV: A

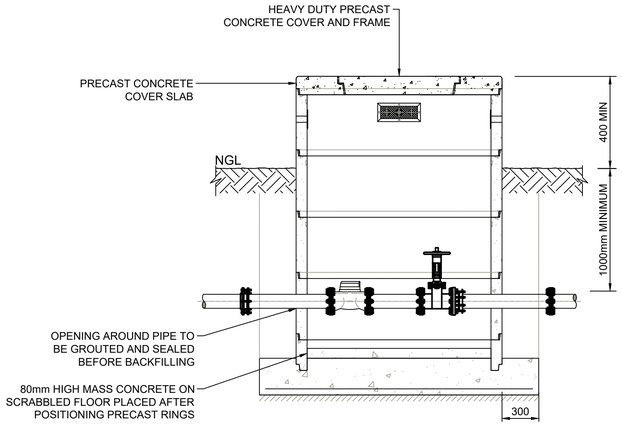

SECTION A
SCALE 1:25

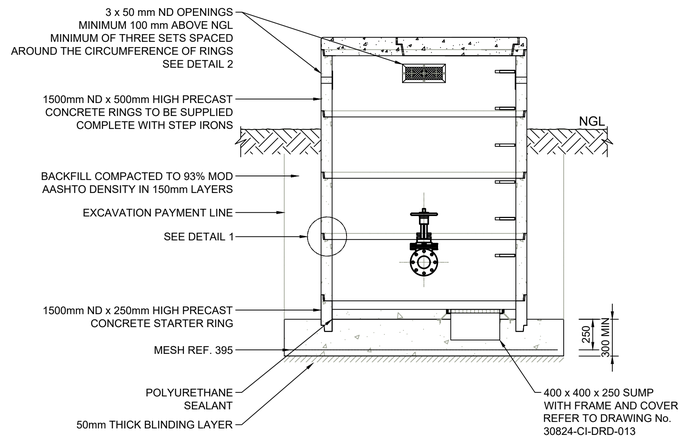

SECTION B
SCALE 1:25

NOTES

1. ALL DIMENSIONS ARE IN MILLIMETRES UNLESS OTHERWISE SHOWN.
2. PIPE MATERIAL: MAIN LINES AS PER LONGITUDINAL SECTIONS.
3. UNLESS OTHERWISE STATED, THE FOLLOWING SHALL APPLY TO ALL STEEL PIPES AND SPECIALS:

PIPE ND (mm)	PIPE WALL THICKNESS (mm)	SPECIFICATION
50	3.910	ASTM A106 GRADE B
80	5.490	ASTM A106 GRADE B
100	6.020	ASTM A106 GRADE B
150	7.110	ASTM A106 GRADE B
200	5.000	API 5L GRADE X42
250	5.000	API 5L GRADE X42
350	6.000	API 5L GRADE X42
400	6.000	API 5L GRADE X42

4. CORROSION PROTECTION:

   STEEL PIPES, SPECIALS AND FLANGES PASSING THROUGH CHAMBER WALLS AND OUTSIDE CHAMBERS (SOIL), TO BE TAPE WRAPPED.
5. CONCRETE:

   STRENGTH REQUIREMENT AT 28 DAYS:

   STRUCTURAL CONCRETE GRADE 30/19 MPa

   BLINDING AND MASS CONCRETE FILLING GRADE 15/19 MPa

   FINISHES:

   ROUGH: CONCEALED SURFACES BELOW FINISHED GROUND LEVEL, EXCEPT INSIDE CHAMBERS. REFER TO THE SPECIFICATIONS.

   SMOOTH: ALL SURFACE FINISHES NOT CLASSIFIED AS "ROUGH" ABOVE SHALL BE CLASSIFIED AS "SMOOTH". REFER TO THE SPECIFICATIONS.

   ALL EXPOSED EDGES TO HAVE 20 x 20mm CHAMFERS.
6. ALL STEEL BOLTS AND NUTS AND ANCHOR BOLTS INTO CONCRETE SHALL BE STAINLESS STEEL GRADE 304.

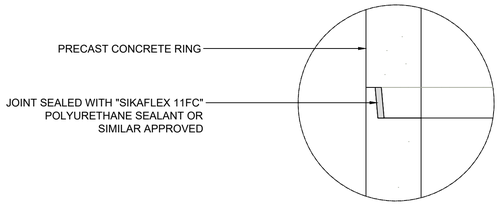

DETAIL 1: TYPICAL JOINT DETAIL
SCALE 1:5

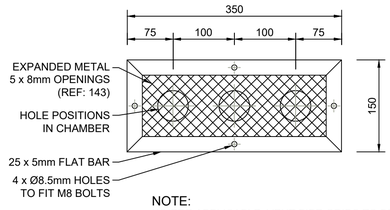

NOTE:
WHERE APPLICABLE, VENT PIPE GRIDS TO BE FABRICATED AT A RADIUS TO FIT OUTSIDE CIRCULAR PRECAST CONCRETE CHAMBERS

DETAIL 2: VENTILATION GRID
SCALE 1:5

WATER METER AND ISOLATING VALVE INSTALLATION FOR 160mm ND PIPES PER CHAMBER

ITEM No.	DESCRIPTION	QTY	FLANGES	PRESSURE RATING (BAR)
WMIV1	150mm ND x ±685mm LONG HDGMS PIPE WITH BOTH ENDS FLANGED.	1	TABLE 1600	-
WMIV2	150mm ND FLANGED ELECTROMAGNETIC WATER METER WITH READING UNIT AND SCREEN MOUNTED ON METER. THE METER MUST BE CAPABLE OF MEASURING FLOWS OF BETWEEN 10 m^3/h and 70 m^3/h.	1	TABLE 1600	16
WMIV3	150mm ND x ±430mm LONG HDGMS PIPE WITH BOTH ENDS FLANGED.	1	TABLE 1600	-
WMIV4	150mm ND FLANGED RESILIENT SEATED GATE VALVE.	1	TABLE 1600	16
WMIV5	150mm ND DISMANTLING JOINT.	1	TABLE 1600	16
WMIV6	150mm ND x ±730mm LONG HDGMS PIPE WITH ONE END FLANGED. LENGTH TO SUIT DISMANTLING JOINT.	1	TABLE 1600	-
PLEASE NOTE THAT 'HDGMS' STANDS FOR HOT DIPPED GALVANIZED MILD STEEL				

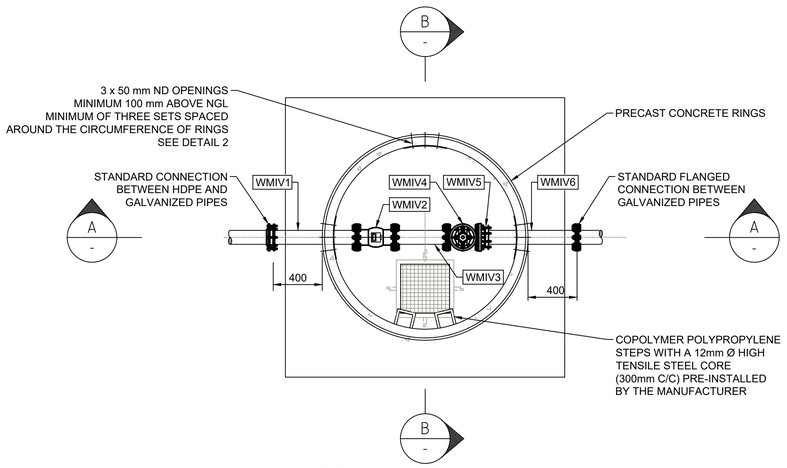

TYPICAL FLOOR PLAN
SCALE 1:25

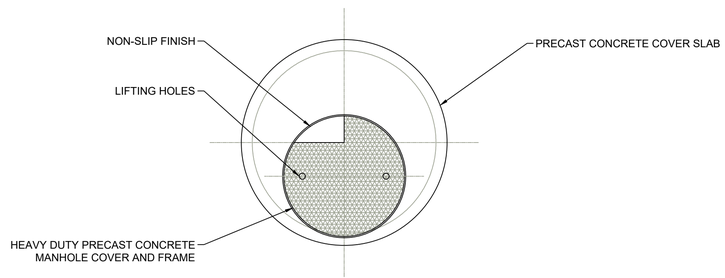

ROOF PLAN
SCALE 1:25

PRELIMINARY

All dimensions must be verified on site before the works commence. Refer any discrepancies to the Engineer.

REVISION SCHEDULE

No	DATE	DESCRIPTION	DRW	CHK
A	12/06/20	PRELIMINARY DESIGN	WvS	LL
B	13/10/22	FOR TENDER	WvS	LL

CONSULTING ENGINEER

SIGNATURE	PR No	DATE

CLIENT

SIGNATURE		DATE
DESIGNED	DRAWN	CHECKED
L LOUW	W v STADEN	E SERFONTEIN

CONSULTANT
iX engineers
Infrastructure Excellence
Montrio Corporate Park | Block 3, 1st Floor North Wing | 10 Oliver Road Monument Heights | Kimberley | 8301
Tel: +27 (0) 53 830 0460 | Fax: +27 (0) 53 832 2497
www.ixengineers.co.za

CLIENT
Ubuntu Municipality

PROJECT
VICTORIA WEST UPGRADING OF GROUNDWATER SUPPLY

DRAWING DESCRIPTION
DETAILS OF WATER METER AND ISOLATING VALVE INSTALLATION AND CHAMBER

SCALE FOR REDUCED PLAN
0 5 10 20 30 40 50
50mm ON ORIGINAL PLAN

DATE	SCALE	ORIGINAL SIZE
2022/10/13	AS SHOWN	A1

DRAWING NUMBER: 301824-CI-DRD-005
REV: A

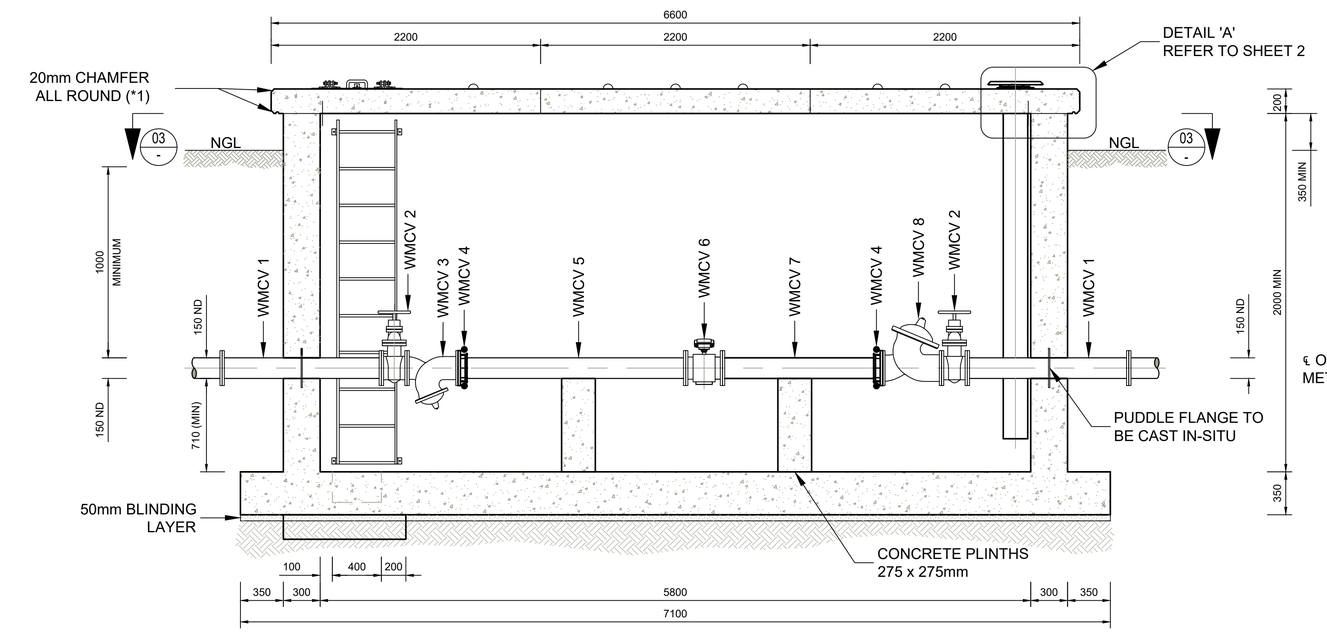

SECTION 01-01

SCALE 1:25

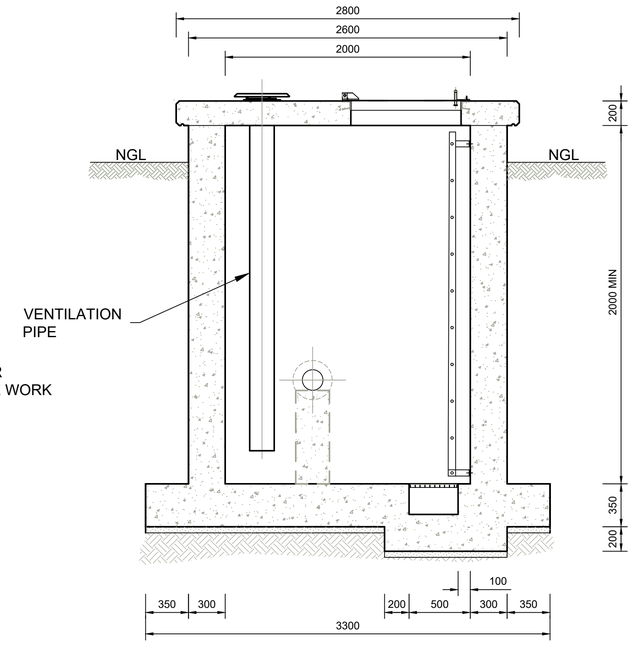

SECTION 02-02

SCALE 1:25

NOTES

1. ALL DIMENSIONS ARE IN MILLIMETRES UNLESS OTHERWISE SHOWN.
2. PIPE MATERIAL: MAIN LINES AS PER LONGITUDINAL SECTIONS.
3. UNLESS OTHERWISE STATED, THE FOLLOWING SHALL APPLY TO ALL STEEL PIPES AND SPECIALS:

PIPE ND (mm)	PIPE WALL THICKNESS (mm)	SPECIFICATION
50	3.910	ASTM A106 GRADE B
80	5.490	ASTM A106 GRADE B
100	6.020	ASTM A106 GRADE B
150	7.110	ASTM A106 GRADE B
200	5.000	API 5L GRADE X42
250	5.000	API 5L GRADE X42
350	6.000	API 5L GRADE X42
400	6.000	API 5L GRADE X42

4. CORROSION PROTECTION:

   STEEL PIPES, SPECIALS AND FLANGES PASSING THROUGH CHAMBER WALLS AND OUTSIDE CHAMBERS (SOIL), TO BE TAPE WRAPPED.
5. CONCRETE:

   STRENGTH REQUIREMENT AT 28 DAYS:

   STRUCTURAL CONCRETE GRADE 30/19 MPa

   BLINDING AND MASS CONCRETE FILLING GRADE 15/19 MPa

   FINISHES:

   ROUGH: CONCEALED SURFACES BELOW FINISHED GROUND LEVEL, EXCEPT INSIDE CHAMBERS. REFER TO THE SPECIFICATIONS.

   SMOOTH: ALL SURFACE FINISHES NOT CLASSIFIED AS "ROUGH" ABOVE SHALL BE CLASSIFIED AS "SMOOTH". REFER TO THE SPECIFICATIONS.

   ALL EXPOSED EDGES TO HAVE 20 x 20mm CHAMFERS.
6. ALL STEEL BOLTS AND NUTS AND ANCHOR BOLTS INTO CONCRETE SHALL BE STAINLESS STEEL GRADE 304.

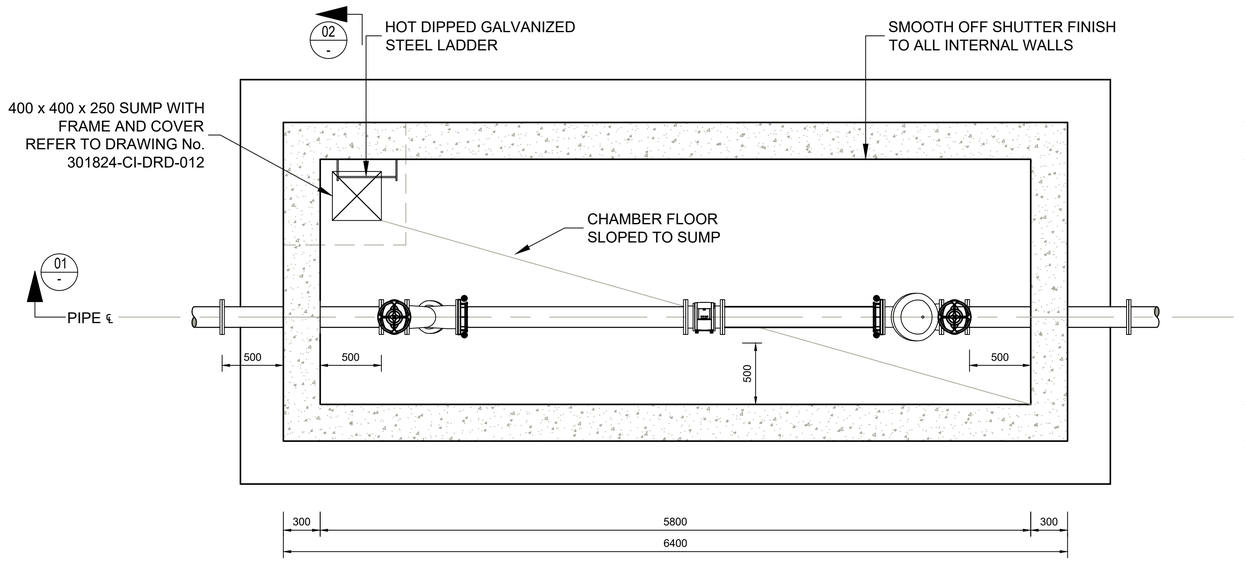

SECTION 03-03

SCALE 1:25

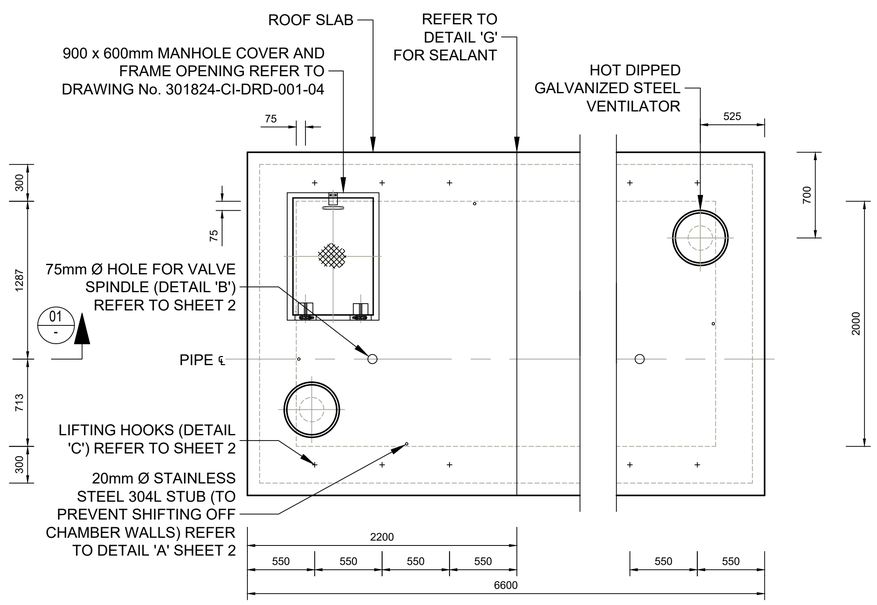

ROOF DETAIL

SCALE 1:25

PRELIMINARY

All dimensions must be verified on site before the works commence. Refer any discrepancies to the Engineer.

REVISION SCHEDULE

No	DATE	DESCRIPTION	DRW	CHK
A	12/06/20	PRELIMINARY DESIGN	WvS	LL
B	13/10/22	FOR TENDER	WvS	LL

CONSULTING ENGINEER

SIGNATURE | PR No | DATE

CLIENT

SIGNATURE | DATE

DESIGNED	DRAWN	CHECKED
L LOUW	W v STADEN	E SERFONTEIN

CONSULTANT

iX engineers
Infrastructure Excellence
Eastwood Office Park |Protea House | 270 Lynwood Service Road Lynnwood Ridge | Pretoria | 0081
Tel: +27 (0) 12 745 2000 | Fax: +27 (0) 12 745 2001
www.ixengineers.co.za

CLIENT

Ubuntu Municipality

PROJECT

VICTORIA WEST UPGRADING OF GROUNDWATER SUPPLY

DRAWING DESCRIPTION

WATER METER AND CONTROL VALVE INSTALLATION: CHAMBER AND PIPEWORK SHEET 1 OF 2

SCALE FOR REDUCED PLAN

0 5 10 20 30 40 50

50mm ON ORIGINAL PLAN

DATE	SCALE	ORIGINAL SIZE
2022/10/13	AS SHOWN	A1

DRAWING NUMBER	REV
301824-CI-DRD-006-01	A

NOTES

1. ALL DIMENSIONS ARE IN MILLIMETRES UNLESS OTHERWISE SHOWN.

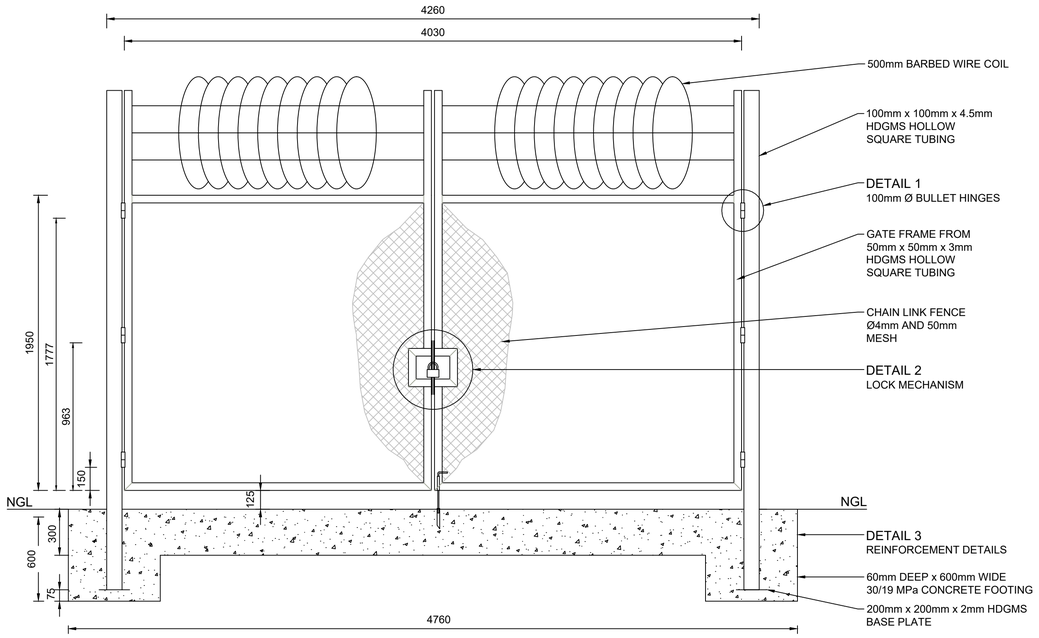

TYPICAL GATE DETAIL

N.T.S

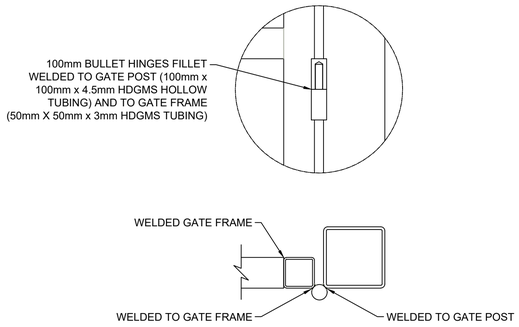

DETAIL 1

N.T.S

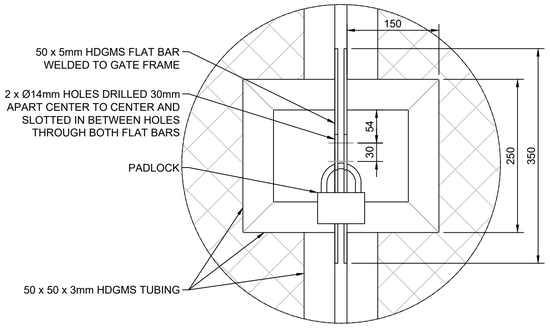

DETAIL 2

N.T.S

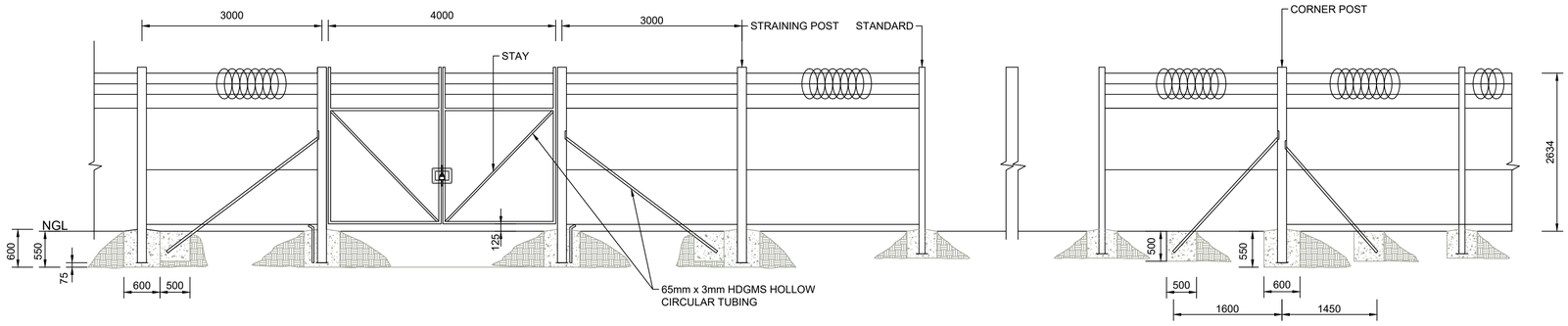

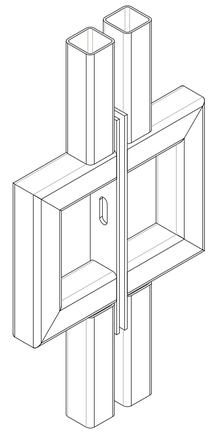

ISOMETRIC VIEW OF DETAIL 2

N.T.S

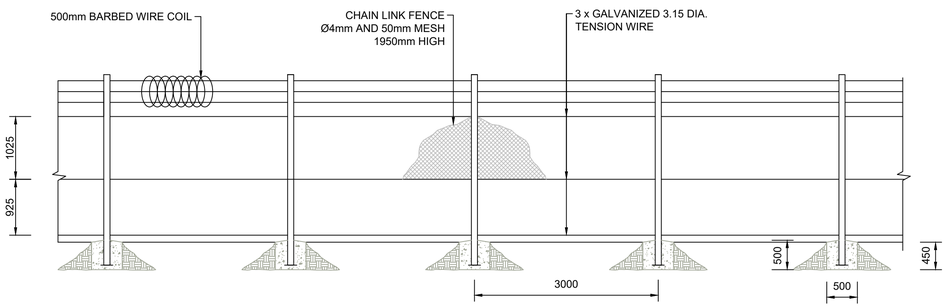

TYPICAL FENCE LAYOUT

N.T.S

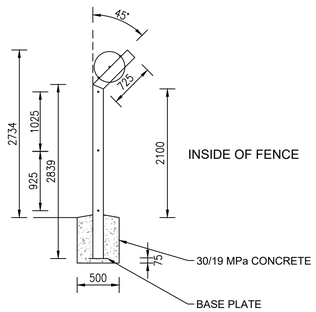

FENCE SIDE VIEW

N.T.S

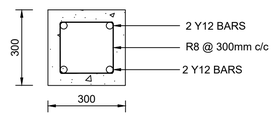

DETAIL 3

N.T.S

TENDER

All dimensions must be verified on site before the works commence. Refer any discrepancies to the Engineer.

REVISION SCHEDULE

No	DATE	DESCRIPTION	DRW	CHK
A	12/06/20	PRELIMINARY DESIGN	WvS	LL
B	13/10/22	FOR TENDER	WvS	LL

CONSULTING ENGINEER

SIGNATURE | PR No | DATE

CLIENT

SIGNATURE | DATE

DESIGNED	DRAWN	CHECKED
L LOUW	W v STADEN	E SERFONTEIN

CONSULTANT

iX engineers
Infrastructure Excellence
Montrio Corporate Park | Block 3, 1st Floor North Wing | 10 Oliver Road Monument Heights | Kimberley | 8301
Tel: +27 (0) 53 830 0460 | Fax: +27 (0) 53 832 2497
www.ixengineers.co.za

CLIENT
Ubuntu Municipality

PROJECT
VICTORIA WEST UPGRADING OF GROUNDWATER SUPPLY

DRAWING DESCRIPTION
DETAILS OF DIAMOND MESH FENCE AND STEEL GATE

SCALE FOR REDUCED PLAN
0 5 10 20 30 40 50
50mm ON ORIGINAL PLAN

DATE	SCALE	ORIGINAL SIZE
2022/10/13	AS SHOWN	A1

DRAWING NUMBER	REV
301824-CI-DRD-011	A

P:\Proj - Active\301824 - Ubuntu Infrastructure projects\8. Drawings\3. New Drawings\301824-CI-DRD-011 - Standard\301824-CI-DRD-011.dwg
18/10/2022 10:41:51 Printed By: Ngosi Shabangu (Kimberley)